Heartily thank you for choosing the concrete batching plant manufactured by Haomei Machinery Equipment Co., Ltd., we will provide you with high quality products and star-level after service.

Haomei Machinery Equipment Co., Ltd. is a leading enterprise being engaged in the research and production of engineering construction machinery, the product has become the well-known brand at home and abroad. Cement concrete batching plant is a large-scale batching plant integrating the material storage, weighing with mixing, with high efficiency. The supporting host machine adopts JS1000-JS3000 double horizontal shaft forced mixer with the concrete discharge height of 3.8m, which can mix concrete of various types and is suitable for constructing engineering, roads, ports, piers, bridges and the construction sites needing engineering construction concrete. Haomei provides you with first-class products, first-class quality and first-class service.

This Instruction Manual briefly introduces the principle, performance parameters, technical characteristics, structure, safety operation, maintenance and other relevant knowledge, as well as safety information, operation instructions, transport information, lubrication information and maintenance information to you.

In order to make better use of the machine, please read this Instruction Manual carefully before operating. This will:

- Help you understand the structure and function of this mixing equipment;
- Avoid the equipment failure caused by misoperation;
- Increase the security of the equipment;
- Prolong the service life of the equipment;
- Reduce the repair costs and downtime.

To ensure that this manual is like a tool in the toolbox, so as to read at any time. Only fully understand the content in this manual can you skillfully and safely operate the machine.

Honorific friends: thank you for trusting in Haomei, sincerely wish you can realize your ambitions and make great achievements in your enterprise.

Haomei Machinery Equipment Co., Ltd.

Special Presentation:

The user should carefully maintain and properly use the concrete batching plant, for the results caused by violating the following stipulations, Haomei is not obligatory to take on the responsibilities:

- The user has to carefully read this Instruction Manual before using the batching plant and operates it in accordance with the mentioned requirement.
- The user should use this batching plant under the scope stipulated in the instruction manual, not free for other purposes.
- The operator must be skilled worker who has been trained and should keep the emotion stable, the mind conscious and the reaction speedy.
- The user can't employ the unskilled technician to maintain or disassemble the batching plant.
- The user must conduct each item of technical maintenance according to the requirements in this Instruction Manual.
- The data, technical specification and diagram were collected and edited according to the data obtained at the time of compiling, if there is something modified, the manufacturer will not separately give notice, please inquire from the company.

Guide

1. Guide

Literature

This *Operating Instruction* is a manual for properly using, repairing and maintaining the equipment, which should be placed in the control room of the equipment all along to convenient for consulting at any time. If it is damaged or loses, please ask for （order）a new manual from the service department of our company at once.

The *Operating Instruction* contains the safety data, technical instruction, operation instruction, transportation data, lubrication data and maintenance data.

The details or optional components showed in some photos or graphical representation may be different from your batching plant.

This manual may not contain the changes of the equipment due to the continuous improvement and upgrading of product design. This manual should be read and studied carefully and saved together with the equipment.

When you have any question about the equipment or this manual, please call the service engineer of Zhengzhou Haomei Company for the latest information.

Safety

The basic safety precautions are listed in the Safety Part. In addition, the contents of various warning signs and labels on the equipment are listed in detail in this part.

Before operating, lubricating, maintaining and repairing the equipment, you must read and understand the basic precautions in Safety Part.

Technical Explanation

In the part of technical explanation, such contents as performance parameters, technical characteristics, working principle, structure and composition of the equipment are listed, which can help you comprehensively understand this equipment.

Operation

Operating part is provided for the new operators as reference, and for the experienced operators to use as review data. This section discusses the data of a variety of instruments, switches, equipment control mechanism, optional component control mechanism, transport and towing information.

The photographs and diagrams are to guide the operator to check, start, operate and stop the machine in accordance with the correct procedures.

This manual outlines the basic operating technique. The technology and skill of the operators will be improved with their continuous deepening of understanding of the equipment and equipment performance.

Maintenance

The maintenance part is guide for maintaining the equipment. The items needing repair and maintenance within the stipulated maintenance period are listed in the Maintenance Period Table and Lubrication Maintenance Period Table. The items without specific maintenance period are listed under the title “Maintenance Period”. The Maintenance Period Table can be used as index or “exclusive guide” of repair and maintenance procedures.

Maintenance Period

The maintenance period is determined based on the working hour. If the calendar time can provide more convenient planning period and the reading is close to that counting based on working hour, the calendar period (day, year, etc.) can be used instead of working hour period. No matter counting based on the working time or calendar, the recommended maintenance should be conducted in accordance with the period firstly coming.

Under the extremely bad, dusty or damp working conditions, it may be necessary to conduct lubrication more frequently than the stipulation in the Maintenance Period Table.

2. Sign Explanation

This is the sign “Pay attention to safety”.

When you see this sign on the machine or in the manual, you should be aware of the injury risk.

Please follow the recommended precautions and safe operation methods.

On the safety sign of the machine, the words “Danger”, “Warning” and “Attention”

should be used together with 

“Danger” refers to the situation with direct risk, if the user doesn’t avoid, it will cause death or serious injury.

“Warning” refers to the situation with potential risk, if the user doesn’t avoid, it may cause death or serious injury.

“Attention” refers to the situation with potential risk, if the user doesn’t avoid, it may cause slight or moderate injury.

The safety plate “Danger” or “Warning” is placed near the specific dangerous places. The general matters needing attention are listed on the safety plate “Attention”.

In this Instruction Manual, “Attention” is also used to draw attention to safety instruction.

In order to avoid the confusion between the indications of machine protection and personal security, the signal word “Important” is adopted to express the situation that may cause machine damage.

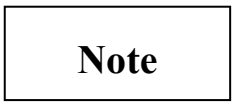

“Note” is used to additionally explain various information.

Content

Chapter 1 Safety Part

Special Presentation:

□Our company will be irresponsible for the injuries caused by violating the safe operation required in the Instruction Manual or negligence.

□This disclaimer is also effective for the injuries caused by the user arbitrarily altering the concrete mixing equipment and adding device.

□When you have to conduct operations incompatible with the safe operation regulations stipulated in the operation instruction, please consult our company firstly.

1.1 Basic Principle

Concrete batching plant is a complete set of special machinery for preparing fresh concrete, its function is to feed, convey, store, batch, weigh, mix and discharge the material in preset mixing proportion, to produce finished concrete meeting the quality requirements.

When operating this equipment, the following restrictive principles should be abided strictly.

1. The industrial control computer of the concrete batching plant can't be used as office computer.
2. Please do not produce under thunder and lightning weather, shut down the system and disconnect the main power.
3. Make sure that this manual can be obtained in the control cabinet at any time.

1.2 Misoperation

1. The newly purchased mixer can not run at full load at once at the beginning of using, if the reducer doesn't conduct running during adjustment period, its service life will be significantly reduced.
2. The belt conveyer can not start with load.
3. If the aggregate incompatible with the stipulation is used to produce the concrete, it will damage the equipment, the maximum particle diameter of the aggregate is 80mm.
4. The industrial control computer can not connect the outside network and be used as an office computer or entertainment, games computer.
5. Prohibition: during the equipment maintenance, the belt and mixer are prohibited from starting.
6. Special note: the warrant certificate guarantees that when problem occurring, your product can obtain warranty from Zhengzhou Haomei within the warranty period.

In some cases, even if the warranty has expired, Zhengzhou Haomei also provides on-site services, such services are usually free. However, for the following reasons:

a) The equipment is abused, or the user disassembles or modifies the equipment without permission.

b) Direct or indirect damage to persons or property caused by improper operation or misuse.

c) Abnormal operation, wear and damage, or change its performance to make it exceed the original stipulation of our company.

d) The failure caused by the irresistible factors unexpected, such as earthquake, flood.

Our company will be inresponsible, and not responsible for free repair.

1.3 Injury Risk

1. Wear protective appliances

(a) Wear tight clothing and safety appliances suitable for work.

You may need the following safety appliances:

□Hard helmet

□Safety shoes

□Safety glasses, goggles or face shield

□Thick gloves

□Hearing protectors

□Reflective clothing

□Rain gear

□Mask or filter mask

(b) be sure to wear the working clothes and safety appliances, don't take any chance.

(c) Avoid wearing loose clothes, jewelry or other things that may hook the control component and other parts.

(d) The operator is required to be concentrated when operating the machine. Don't listen to the radio or music during operating.

2. Noise protection

(a) Exposure to loud noise for long time will cause the auditory sense damaged or lost.

(b) Wear appropriate hearing protection devices, such as ear plugs, to avoid harmful or uncomfortable loud noises.

1.4 Equipment Protection

1.4.1 Before the Operation

1. Check the relative position of the major components, the small pieces of the equipment shall not have phenomena of missing and neglected installation.

2. The couplings, such as pin and bolt, must be jointed solidly, which should not be loose. The bolts must be equipped with locking measures with appropriate tightening torque. The pin must be equipped with sloughing protection measures.

3. Water-supply pipes and gas-supply pipes must be sealed reliably, which can not have the phenomena of water leakage and air leakage, the pipeline layout should be neat and beautiful.

4. The connection (such as of the inlet and outlet of spiral conveyor, the inlet of the mixer) of aggregate and powder lot conveying system must be sealed reliably without ash leakage.

5. Make sure of the straightness of the rack center and keep both side of the rack horizontal when installing the belt conveyer. Make sure that each roller and rotary drum can rotate neatly，the cleaner contacts with the belt evenly and can rotate freely, the tightness of the belt is appropriate and the axis of each rotary drum is horizontal and parallel to each other.

6. The filler bins are connected solidly, the error between the axis of the filler bin and the verticality of the ground should not be more than 2‰.

7. The wiring of the electrical appliance is correct and firmly fixed. Make sure that the wiring will not be damaged by transport vehicle and feeding machine during the equipment operating. The electrical insulation must be reliable, the resistance to ground of the batching plant should not be more than 4 OM.

8. Lubricate the parts without lubrication.

9. The appearance of the equipment should be clean and neat without paint coming off.

10. Debug the system.

1.4.2 Start and Operate the Equipment

1. Please conduct the inspection before the start and the production operation of the equipment in strict accordance with the operating instruction in Chapter 3 of this Instruction Manual.

2. Please don't produce during thunder and lightning weather to avoid the damage may caused by the thunder and lightning. Please turn off the system and disconnect the main power.

1.4.3 Maintenance after Equipment Shutdown

1. Please maintain the equipment regularly according to the content of equipment maintenance in Chapter 3 of this manual.

2. If the downtime is more than one week, the material in the weighing hopper must be emptied, and t he mixer, discharge

hopper etc. must be cleaned, so as to avoid material compaction.

1.5 Dangerous Area

(a) Dangerous, prohibit staying in this work area

□Do not enter the working scope of bucket elevator or inclined belt conveyor!

□Otherwise, there is the risk of injuries caused by the operating machine!

(b)Dangerous, prohibit staying in this work area

□Do not enter the working scope of proportion station!

□Otherwise, there is the risk of being drawn into the horizontal belt!

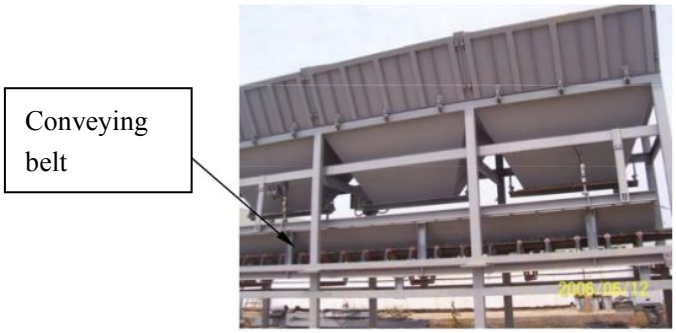

(c)Dangerous, prohibit staying in this work area

□Do not enter the working scope under the discharge hopper!

□Otherwise, there is the risk caused by the falling concrete!

□There is the risk of safety misadventure caused by the shuttling truck-mounted mixer!

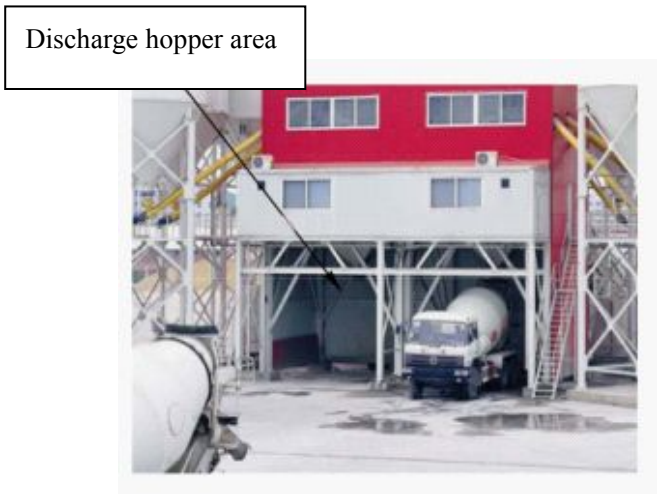

1.6 Selection and Qualification of the Operator

1. Operator

(a) Responsibilities: be responsible for operational control of concrete batching plant..

(b) Personal skills: the age must be 25 to 55 years old, the intelligence level is normal and the health condition is good;

(c) The operator who has received professional training and been certified having the operating capacity can operate the batching plant.

2. Welder and Electrician

When there is cracking or electrical failure occurring in the component of the batching plant, please contact us. Prohibit repairing welding or change without permission, for the generating consequences, Zhengzhou Haimei Company is irresponsible.

(a) Welder: only the welder designated by Zhengzhou Haomei Company and holding a valid welder certificate can implement

the welding, mainly dealing with the cracking of the welded structures of the batching plant (such as the welding of outrigger mounting plate and foundation embedded part, stair steps or other important parts).

(b) Electrician: only the electrician designated by Zhengzhou Haomei Company and holding a valid electrician certificate can implement the electric work, mainly dealing with the connection, change and upgrading of the electrical circuit and electrical component of the batching plant.

3. Electrical Engineer

(a) Responsibilities: electrical engineer is responsible for the parameter adjustment, program upgrading, fault diagnosis, troubleshooting and commissioning of the electrical system.

(b) Personal skills: the inspection, modification and replacement of the electric system and electric component of the batching plant must be done by electrical engineers or after-sales engineers (also can be done under the guidance of electrical engineers or after-sales engineers), which must meet the electricity utilization requirements. Only these qualifies personnel can install, connect, split and open the electrical switch box.

4. After-sales Engineer

(a) Responsibilities: after-sales engineer is responsible for the maintenance of batching plant, including fault detection and trouble shooting, daily maintenance guide, accessories replacing and system upgrading.

(b) Personal skills: the after service engineers of Zhengzhou Haomei are qualified after being trained by the company and delegated to the country, they are able to deal with various failures of the batching plant independently and provide the user with one to one service. If you have any question about the function, usage, maintenance and repair of the equipment, please dial the service hotline 40088788318 to contact with the service dispatch center, we will try our best to help you to solve the problems.

1.7 Inspection of Functional Liquid

1. Regularly check the quantity and quality of various functional liquid used by the equipment

Firstly, check the working condition of the lubrication points of each rotary part every day, and recharge the lubrication oil in time.

Secondly, check the quantity of lubrication oil in the lubrication oil cup of the mixer every day, and recharge the lubrication oil in time.

Thirdly, check the oil level height of the atomized lubricator of the pneumatic system every week, and use the lubrication oil with the viscosity of 2.5-7^{0}E.

2. The recommended brands of lubrication oil for hydraulic pressure system: DAT25 (Mobil) or TELLUS S46 (Shell), the oil consumption is 10 liters, replace once every 2,000 hours or at least one year.

3. The recommended lubrication oil for reduction box of the agitator: MOBIL GEAR 629 (Mobil) or OMALA OIL 150 (Shell).

This machine has been filled sufficient amount of lubrication oil when leaving the factory, please pay attention to check the amount of lubrication oil when operating.

Model	JS2000	JS3000
Lubrication oil required by each set of reducer	12	12
Total oil consumption (L)	24	24

Check the lubrication oil level of the reducer:

After the mixer stops, check whether the oil level is at the specified position.

If the oil level is below the specified symbol, the user must add gear lubrication oil. Please use the lubrication oil that is same as the oil injected originally.

Replenish once per week at least at four places of supporting bearing and 4 places of shaft end sealing (outboard) on the mixer shaft, the oil charge is 4-5 grams once. Please note that the lubrication oil is added at the time of the mixer operating.

Add the lubrication grease at least once per month.

The user must replenish lubrication oil once for the bearing of the discharge door every 250 working hours. Replenish once per month at least.

4. Lubricant Grease Replenishment of Shaft End Sealing

Replenish the grease according to the highest and lowest positions of electric pump.

Use No. 1 or No. 2 extreme pressure lithium-based grease produced by the specific lubrication grease manufacturers.

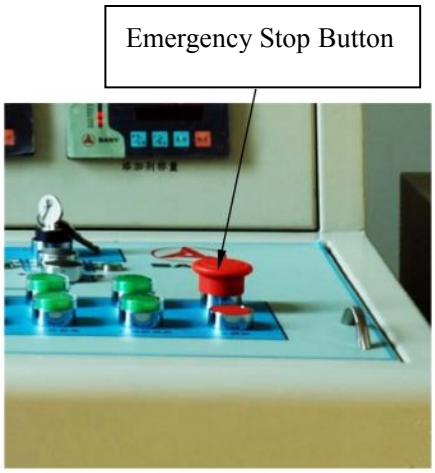

1.8 Emergency Stop Button

There are three emergency stop buttons set for the concrete batching plant: one is installed on the operation platform of the control cabinet, one is at the top or bottom of elevator bucket or inclined belt conveyer, and one on the mixer.

(a) The emergency stop button on the operation platform of the control cabinet

When accident or dangerous situation occurring, press down this button immediately, all the equipments will stop running.

(b) The emergency stop button at the top or bottom of elevator bucket or inclined belt conveyer

The emergency stop button is set near the top or bottom of elevator bucket or inclined belt conveyer, when emergency situation occurring, the user must press down the on-site emergency stop button

(c) The emergency stop button on the mixer

When accident or dangerous situation occurring, press down this button immediately, the mixer will stop running.

Rotate the button in accordance with the arrow direction to make it jump, the emergency stop button will be terminated.

1.9 Notices in Production Operation

1. Standard of Power Supply

The system adopts 380V, 50Hz three-phase four-wire system (TN-S) power supply

2. Responsibilities of Operator

The operators are responsible for operating and controlling the concrete batching plant and must be skilled workers who have been trained. They should keep the emotion stable, the mind conscious and the reaction speedy during operating.

3. Action Components of the Equipment

The main action components of the concrete batching plant are the mixer, flat belt conveyor and inclined belt conveyor. When the equipment running, please stay away from them to avoid injury may caused by the machines.

4. Operation and Inspection of the Control System

(a) Please do not produce under thunder and lightning weather, shut down the system and disconnect the main power.

(b) Avoid starting the mixer and conveyer belt with load as far as possible.

(c) Periodically (1 or 2 months, the specific period is determined by the user based on their data volume.) back up the data to other storage media.

(d) The scale must be re-calibrated after replacing the sensor.

(e) The cabinet door and rotate the all-purpose change-over switch on the door to observe whether the voltage of each phase is normal.

5. Safety Regulations of the Mixer

(a) Avoid starting the mixer with load as far as possible.

(b) People are prohibited standing under the discharge door of the mixer.

(c) Don’t put hands or things into the rotating place of the equipment to avoid injury to people and failures.

(d) The mixer is suitable for inert powdery and granular material with particle size of no larger than 150mm, of which, the media of 120 ~ 150mm does not exceed 12% of the total capacity. This mixer is not suitable for the inert matters with the volume of larger than 150mm and such adhesive media as clay with the quantity of more than 12% and the humidity near to 15%. Semi-dry concrete mixture sticking to the mixer shaft will make the diameter of mixer shaft increase, which will ultimately reduce the efficiency of stirring arm. Therefore, we must maintain the shaft clean.

(e) Non-staff can not use the machine arbitrarily, except the workers of specialized post, other person can not operate the equipment!

(f) The operation and use of the machine must be conducted on the premise of strictly following the stipulations and ensuring the normal working condition!

(g) The user has to check the surrounding of the machine before starting to make sure that the starting of the machine will not cause loss of life and personal injury.

(h) After fault occurring, turn off the equipment immediately and lock the master switch! Check and eliminate the fault instantly!

(i) The following measures must be carried out when conducting inspection, maintenance and repair to avoid casualties caused by the sudden startup of t he equipment:

（1）Turn off and lock the master switch and maintenance switch, and carry the keys about.

（2）Hang out warning signs on the master switch.

6. Safety Operation Regulations of Belt Conveyor

(a) Prohibit putting hands or things into the rotating place of the belt conveyor to avoid injury to people and failures.

(b) The belt transmission system includes flat belt transmission system and inclined belt transmission system. The motor of flat belt transmission system adopts direct starting method and the power of inclined belt transmission system is higher, which adopts Y-△ starting method. The emergency stop switches are installed at both ends of inclined belt to ensure stopping the running of the belt conveyor under the emergency situation.

(c) Debugging steps:

Determine the rotation direction of the belt and electrical roller.

Check whether the emergency stop switch is installed correctly and reliably, and press down the emergency stop switch during the running of the belt without load to observe whether the belt stops running.

1.10 Cleaning of the Batching Plant

1. Cleaning of the Mixer and Discharge Hopper

(a) The mixer should be cleaned after the completion of production or when the downtime is more than half an hour. The material deposit in the mixer should be cleaned up comprehensively after the materials are smashed every day. In the process of cleaning by water, the user can prepare crushed stones of about 500Kg to mix in order to wash cleaner.

(b) The discharge door of the mixer will be kept in open state after it is opened, at the moment, the users can manually open and close the discharge door according to their needs in order to fully clean the mixer door.

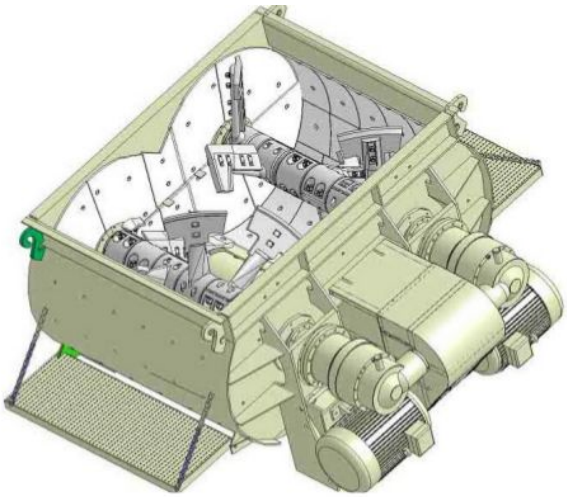

(c) If the downtime is more than one week, the materials (such as cement, water, additive and various aggregate) in each weighing hopper must be emptied, and the discharge hopper must be cleaned, so as to avoid material compaction.

2. Cleaning of Belt Conveyor

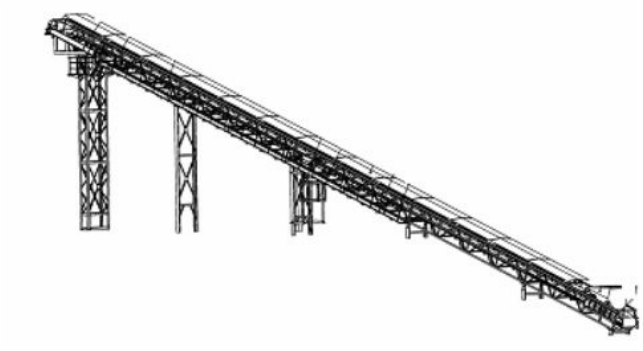

(a) Cleaning of roller and carrier roller

The material deposit on the rotary drum and carrier roller should be cleaned up frequently, because too much material deposit will affect the operation of the belt (deviation).

(b) Maintenance of sand-scraping device

Regularly check the abrasion degree of sand-scraping device, the sand-scraping device should be replaced in time when it is worn to a certain extent.

(c) Replacement of rubber flange

The rubber flange (there is not rubber flange on flat belt) should be replaced (including rubber flange of material-receiving hopper and rubber flange of flat belt) when it is worn seriously and there is material spilling.

3. Cleaning of Powder Lot Tank

Before pumping the powder lot, start the vibrator of the deduster on the top of the tank for 1～2min to shake the dust stratification on the filter element of the deduster off. After the pumping, start the deduster on the tank top again for 1～2min to shake the dust stratification off. In addition, the filter element of deduster and safety valve should be cleaned regularly.

When washing the machine, clean the feeding pipes of fly ash and powder lot tank through vibrating to keep the pipes unblocked.

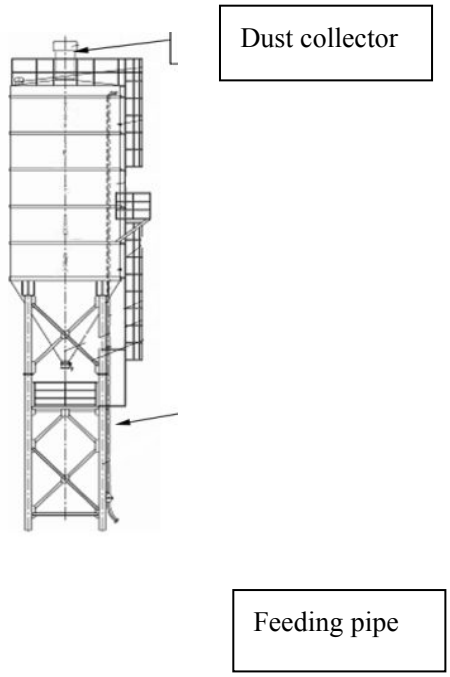

3. Cleaning of Spiral Conveyer

1. The spiral feeding machine should be emptied after the completion of operation every day. The running, sealing and lubricating conditions of the reduction box should be checked once per week to make sure that there isn't abnormal noise and oil leakage. The oil should be replenished if it is insufficient, but not exceeding the oil level. Check whether there is sediment at the outlet and hanging bearing once per week, if there is, clean it to avoid causing blocking. Check the tighten status of the machine coupling once per month. Prohibit mixing chunks of hard material and foreign matters into the transported material.

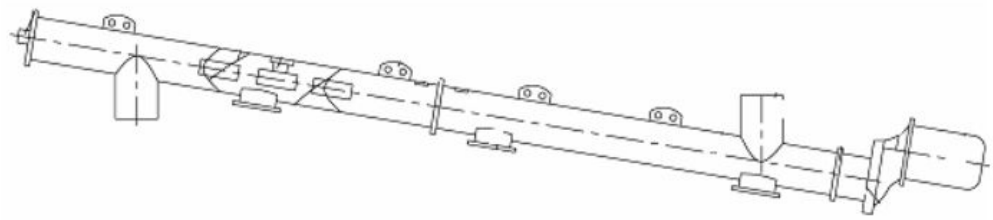

1.11

The electric control system of concrete batching plant is a relatively complex control system, there is high voltage in the power cabinet and operation platform. In order to avoid such accident as electric shock，the non-professionals are prohibited from opening them for maintenance and other operations, the professional servicemen have to strictly follow the safety operation regulations. In addition, the electric control system is designed in accordance with the design load of the batching plant, on person can connect other high power electric equipments in the range of this system.

1. 12 Notices in Fluid Circuit and Gas Circuit Operation

1. Fluid supply system includes the liquid additive supply system and water supply system. The water for concrete mixing is

generally clear water, part of the water can also adopt industrial water recovered from flushing equipment. The pumping of fluid supply system must be unblocked and weighed accurately.

2. The inlet of air inflow filter must be clean to avoid the decrease of air demand may caused by blocking.

3. Open the drain valve before starting the machine and after turning off the machine every day to discharge the water condensed in the air compressor and air storage tank.

4. Place the air compressor at the place with low temperature and low humidity to avoid the rain.

5. Prevent mixing iron filings, dust and scraps of sealing materials during installation and maintenance; use compressed air to fully blowwash after installation.

6. The joints and the inside of the pipes should be cleaned before installing the pipelines; make sure that the adhesive tape and other sundries and fragments will not be retained in the pipeline during installation.

1.13 Notices in Oil Selection

The lubrication condition requirement of reduction gear is more rigid than that of other gears, the wrong selection of oil type will not only reduce the efficiency of the gear, but also reduce the service life of the gear.

In addition, please pay extra attention to that the lubrication oil is prohibited from being used together with other types of lubrication oil.

Chapter2 Technical Explanation

This chapter mainly helps you to understand the structure, main technical parameters, electrical components and other control devices of the concrete batching plant.

2.1 General Description

2.1.1 Overall Structure

The overall structure of batching plant is shown in the diagram. The structure includes material storage system, measuring system, control system, transport system, fluid supplying system, pneumatic system, mixing system, main building framework, control cabinet and dust removal system and is used to complete the works of storing, measuring, transporting, mixing and discharging the raw material of concrete.

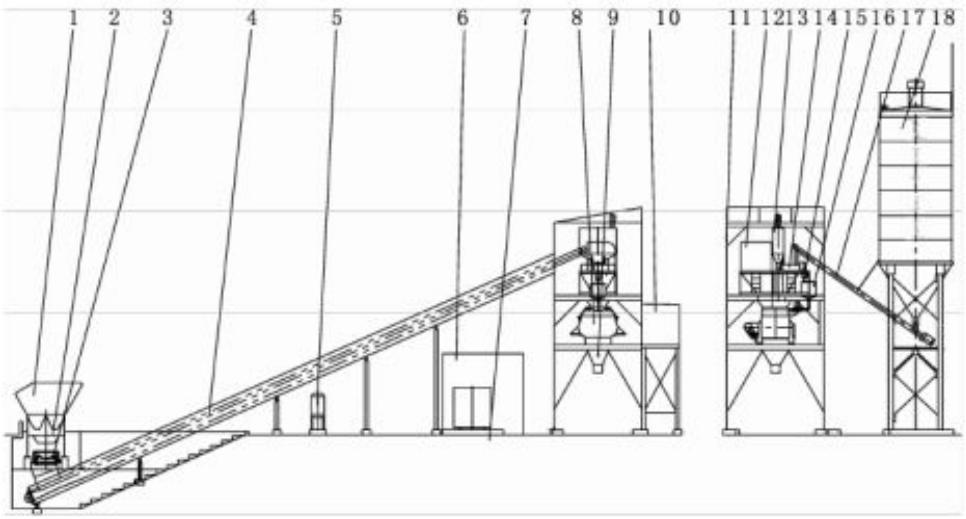

1. Aggr 6. Additive 12. Agg ater weighin

1. Mate

Mate ate wait-for rge hopper) for finished concrete.

2. Weighing system

Weighing system consists of the weighing of aggregate, powder (cement and admixture), water and additive.

3. Transport system

The transport system of concrete batching plant mainly consists of the transport if aggregate and powder lot.

4. Fluid supply system

Fluid supply system consists of the liquid additive supply system and water supply system.

5. Pneumatic system

Pneumatic system mainly consists of container valve, filter air relief valve, flow aided air cushion, pneumatic butterfly valve, pneumatic ball vibrator, air compressor, pneumatic triplet, air storage tank, cylinder and air tube.

6. Mixing system

The mixer of Zhengzhou Haomei mainly consists of gearing device, shaft end sealing, cylinder body and liner plate components, lubricating device, covering and water pipe distributing device，discharge system and mixing device.

7. Main building framework

The main building framework adopts steel structure, mainly includes building top, stairways and fencing, weighing storey, mixing storey and outrigger.

8. Control cabinet and control system

The control cabinet is for the operators operating and managing the batching plant. The control cabinet assembly and electrical control system mainly consist of control cabinet, air condition, electrical control cabinet, table & chair, industrial personal computer, PLC and cable, which are named the nervous system of the whole batching plant and determine the movement of each part.

9. Dust removal system

The dust removal system consists of three parts, which are respectively dust removal when weighing and discharging the cement and admixture, dust removal when bulk cement truck feeding the material into the powder lot tank and dust removal when inclined belt conveyor charging the material into the aggregate wait-for-feed hopper.

2.1.2 Main Technical Parameter

Technical Parameter of Engineer Batching Plant

Serial No.	Parameter name	Model		
		HZS60G	HZS90G	HZS120G
1	Theoretical productivity	60 m³/h	90 m³/h	120 m³/h
2	Model of batching plant	JS1000	JS1500	JS2000
3	Motor power	2×22kW	2×30 kW	2×37 kW
4	Cycle period	60 s	60 s	60 s
5	Nominal capacity of mixer	1000L	1500L	2000L

6	The largest particle of aggregate	¢80 mm	¢80 mm	¢80 mm
7	Capacity of powder lot bin	2×50 t	2×100 t	2×100 t
8	Proportioning capacity of proportioning station	1600L	1600L	1600L
9	Capacity of aggregate bin	3×17 m³	3×17 m³	3×17 m³
10	Type of aggregate	3	3	3
11	Productivity of belt conveyor for aggregate	140 t/h	210 t/h	280 t/h
12	Maximum productivity of spiral conveyor	110 t/h	110 t/h	110 t/h
13	Discharging height	3.8 m	3.8 m	3.8 m
14	Installed capacity	100 kW	160 kW	210 kW
15	Weighing range and accuracy of aggregate	(0～3000)±2% kg	(0～5000)±2% kg	
16	Weighing range and accuracy of cement	(0～900)±1% kg	(0～1200)±1% kg	(0～1200)±1% kg
17	Weighing range and accuracy of fly ash			(0～600)±1% kg
18	Weighing range and accuracy of water	(0～300)±1% kg	(0～400)±1% kg	(0～400)±1% kg
19	Weighing range and accuracy of additives	(0～20)±1% kg	(0～50)±1% kg	

Technical Parameters of Commercial Concrete Batching Plant

Serial No.	Parameter name	Model		
		HZS90/2HZS180	HZS120/2HZS240	HZS180/2HZS360
1	Theoretical productivity	90 m³/h / 180 m³/h	120 m³/h / 240 m³/h	180 m³/h / 360 m³/h
2	Model of batching plant	JS1500	JS2000	JS3000
3	Motor power	2×30kW /4×30kW	2×37kW /4×37kW	2×55kW /4×55kW
4	Cycle period	60s	60s	60s
5	Nominal capacity of mixer	1500L	2000L	3000L
6	The largest particle of aggregate	¢80 mm	¢80 mm	¢80 mm

7	Capacity of powder lot bin	4×100 t/8×100 t	4×200 t/8×200 t	4×200 t/8×200 t
8	Proportioning capacity of proportioning station	2400L	3200L	4800L
9	Capacity of aggregate bin	4×15 m³/8×15 m³	4×25 m³/8×25 m³	4×30 m³/8×30 m³
10	Type of aggregate	4	4	4
11	Productivity of belt conveyor for aggregate	500t/h	700t/h	700t/h
12	Maximum productivity of spiral conveyor	80t/h	110t/h	110t/h
13	Discharging height	3.8m	3.8m	3.8m
14	Installed capacity	164kW/2×164kW	210kW/2×210kW	250kW/2×250kW
15	Weighing range and accuracy of aggregate	(0～2000)±2% kg	(0～3000)±2% kg	(0～3000)±2% kg
16	Weighing range and accuracy of cement	(0～900)±1% kg	(0～1200)±1% kg	(0～1800)±1% kg
17	Weighing range and accuracy of fly ash	(0～500)±1% kg	(0～500)±1% kg	(0～1000)±1% kg
18	Weighing range and accuracy of water	(0～400)±1% kg	(0～600)±1% kg	(0～800)±1% kg
19	Weighing range and accuracy of additives	(0～50)±1% kg	(0～50)±1% kg	(0～80)±1% kg

2.2 System Overview

2.2.1 Material storage system

Material storage system consists of the storage system (powder lot tank, water tank, aggregate storage silo, aggregate wait-for-feed hopper, additive tank and so on) for raw material used for producing concrete and the storage system (discharge hopper) for finished concrete. In order to achieve the continuity of concrete production and improve the productivity, please make sure that there is certain storage quantity of various raw materials for preparing concrete, which can also remit the situation that the production is influenced by the shortage of raw material in a short period. The storage system is for remitting the contradiction between the fast discharge speed of the mixer and the slow feeding speed and long turnover period of the mixer. The material storage system is introduced as follows:

Powder lot tank It is silo for storing powdery material, such as cement, admixture (fly ash, mineral powder, zeolite powder and siliceous dust) and dry powdery additives. There are powder lot tanks of different specifications in accordance with different volume, such as 50t, 100 t, 200 t, 250 t and 300 t to meet the needs of different conditions. The general capacity of powder lot tank which can be transported is 50t and 100t, the tank with larger capacity, such as 200t~500t, should be produced at the installation site.

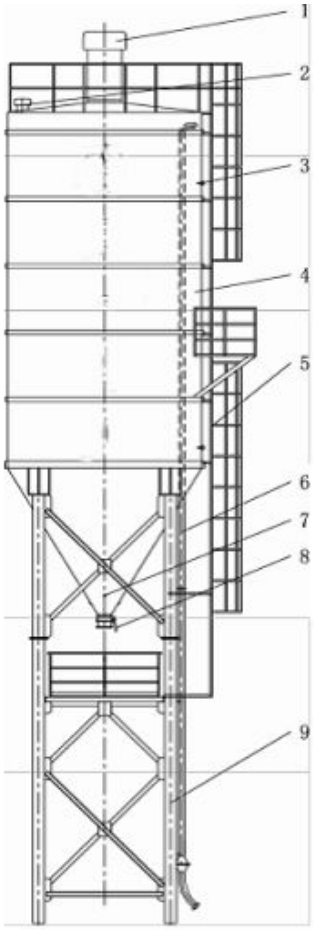

Schematic diagram of powder lot tank

The structure of powder lot tank is shown in the diagram, which consists of dust extractor on warehouse top (1), pressure safety valve (2), paddle switch level indicator (3), warehouse body (4), overhaul ladder (5), blowing pipe (6), flow aided air cushion (7), manual butterfly valve (8) and outrigger (9).

Dust extractor on warehouse top is as shown in the following diagram, its main function is to prevent the dust mingled with the compressed air being discharged directly when the bulk cement truck pumps the bulk material into the powder lot tank and the compressed air is discharged into the atmosphere through the dust extractor on warehouse roof to protect the environment. Before conveying the material into the powder lot tank and after the completion of conveying, the vibrator of the dust extractor must be turned on to shake the dust on the filter element off to guarantee the smooth flow in the tank.

Pressure safety valve is as shown in the diagram, its role is that, during the bulk cement truck pumping the bulk material into the powder lot tank, if the air pressure in the powder lot tank increases due to the blockage and unsmooth air exhausting of dust extractor on warehouse roof, when the pressure rises to a certain value, the safety valve will be opened to release the pressure to protect the powder lot tank.

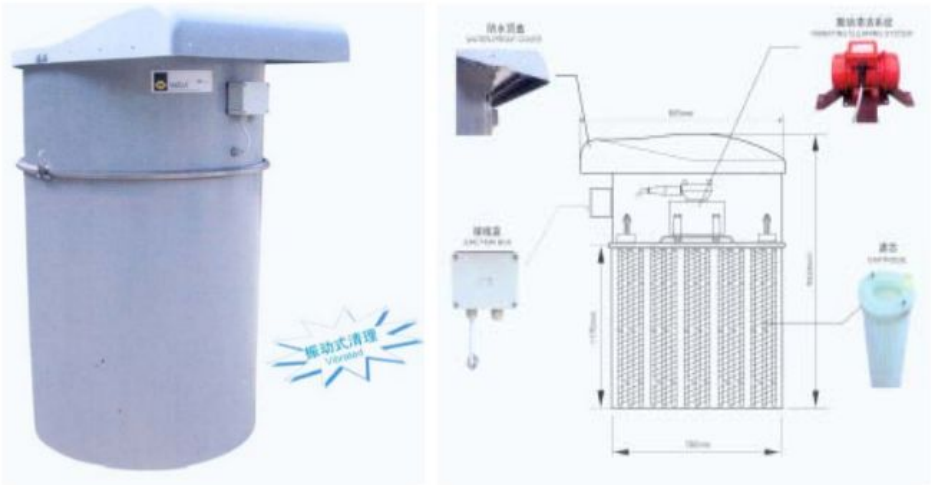

Dust extractor on warehouse roof

Blowing tube is steel tube for transporting materials into the tank, which can be fixed on the tank body. There should be wear-resistant measures at the turning of the tube and quick coupling on the flexible tube for dust discharge of the bulk cement truck to connect the blowing tube on the cement silo conveniently and quickly.

Pressure safety valve Paddle switch level indicator Flow aided air cushion

In order to detect the amount of powder stored in the powder lot tank, level indicator is often set in the silo. The level indicator is shown in the above picture, which is paddle switch level indicator with low and high material level indication. When it gives high level alarm, it means that the material in the powder lot tank has been almost full, the material conveying should stop; when it gives low level alarm, it means that the material in the tank has been almost used up, the material should be re-transported into the tank.

The upper part of the manual butterfly valve is connected with the outlet of the silo body, the lower part is connected with the spiral conveyor through the transition tube. Under normal working condition, the manual butterfly valve is opened to make the powdery material in the tank fall into the spiral conveyor. When the spiral conveyor breaks down, the manual butterfly valve must be closed before disassembling the spiral conveyor to prevent the powder flowing out from the tank.

The mobility of the powder in the powder lot tank is related to the type, temperature and storage time of the material. The temperature of cement transported just now is relatively high, the cement transported through the gas is relatively loose, whose capacity e value is about 0.8~1t/m³, it is very easy to flow. After stockpiling for a period of time, its e value can reach to

1.6t/m³and be even higher sometimes. The mobility of such kind of cement with long storage time is relatively poor, which often generates springing during discharging.

In order to improve the discharge performance of powder lot tank, the impact device is often installed on the cone at the lower part of the silo, which can destroy the powder lot arch bridge to make the discharge smooth. Currently, the arch breaking device has three types of air blast arch breaking, hammering arch breaking and flow aided air cushion arch breaking. Air blast arch breaking means that 3~6 blow holes are set at a certain height from the cone of the silo to the outlet, however, due to the limited contact surface, the effect of air blast arch breaking is not obvious, moreover, the air tap is easy to be blocked because there is water in the compressed air. Hammering arch breaking means using the air-hammer to hammering the silo to achieve arch breaking, but the hammering will generate loud noise and destroy the silo. Flow aided air cushion arch breaking is shown in the diagram, which uses the thrust to push the springing material forward to achieve the arch breaking.

The overhaul ladder is for examining and repairing the related equipments of the powder lot tank, such as cleaning the filter element of dust extractor, repairing the level indicator and pressure safety valve. You must fasten the seat belt and wear the helmet before climbing the overhaul ladder and operate according to the related safety operation regulation.

The silo is a cavity container made through rolling and welding the steel plate, the upper part is cylindrical and the lower part is conoid. The silo must be sealed and not allow the rain inflowing, otherwise, it will cause the powder agglomeration.

Outrigger is the supporting part of powder lot tank, which is generally tailor-welded by steel tube and steel angle or channel steel.

Aggregate storage silo It is the silo for storing ballast and is often referred to as batching station after connected with aggregate weighing part. Batching station play a role in storing the ballast and controlling the ingredient when weighing the ballast. The upper silo is made by concrete pouring and can also be made of steel structure, which is usually divided into batching station of ground storehouse type and batching station of steel structure.

The following diagram is batching station of ground storehouse type which consists of concrete storage silo (1), pull sensor (3), weighing hopper (4), screen (5), shaker (6), cylinder (7), weighing hopper door (8) and storage hopper door. The concrete storage silo at the upper part and the hopper constitute aggregate storage silo. The screen is used to filter out the coarse aggregate which does not meet the requirement to ensure the normal operating of the equipment. Opening and closing the storage hopper door can prepare material in the weighing hopper, the storage hopper door is cambered. Adjusting the space between the hopper door and the hopper can effectively prevent the material being blocked by the door. Compressed gas reaches to both ends of the cylinder piston which is the executive component to make the cylinder piston rod act, so as to drive the switch of the hopper door.

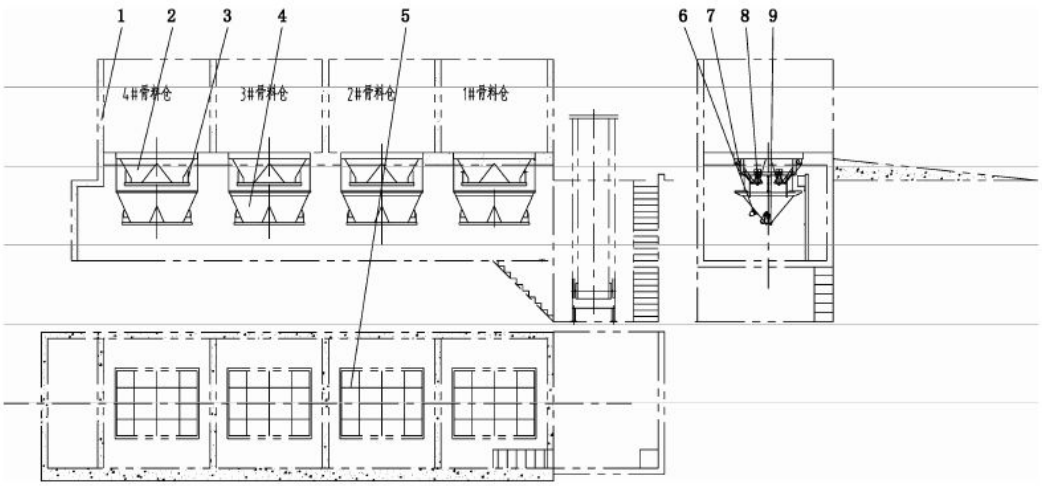

Batching station of ground storehouse type

To achieve the allocation of various aggregate. Because the sand material is of high viscosity, when preparing the sand material, open the hopper door and start the shaker delayedly to make the material discharge smooth.

The following diagram is batching station of steel structure, which consists of front plate (1), rear plate (2), baffle plate, (3), storage hopper (4), bracket (5), aggregate weighing hopper (6), screen (7), lateral plate (8) and load cell (9). The front plate, rear plate, baffle plate, lateral plate and storage hopper constitute the aggregate storage silo of the batching station of steel structure.

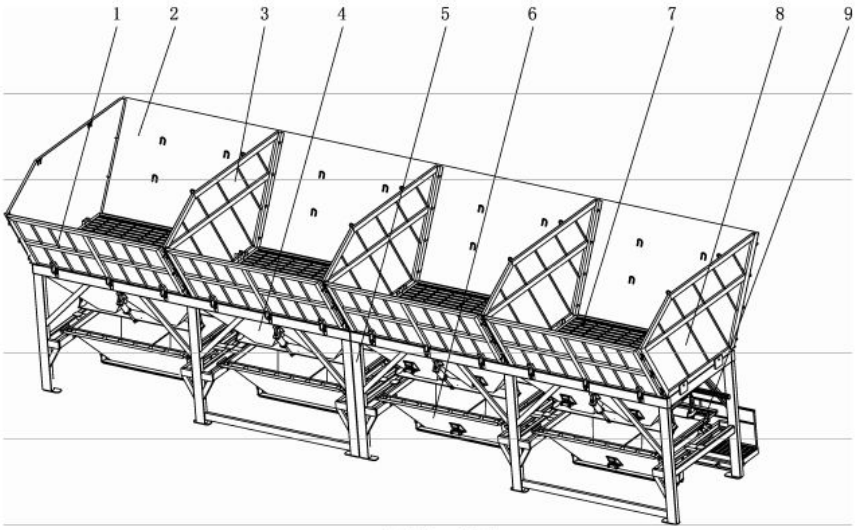

Batching station of steel structure.

At the upper part of the batching station of steel structure, there are front plate, rear plate, lateral plate and baffle plate forming a closed silo, the plates are connected by bolts. During transporting, each plate can be put down along the articulated mechanism of the framework, which is convenient for transporting. There are screen set at the bottom of the silo to avoid big stones entering into the weighing hopper. There is a weighing hopper with independent scale under each silo to ensure the accuracy of weighing. This structure has such characteristics as convenient feeding, smooth discharging, compact structure, quick installation and convenient transport. The number of silo at the batching station is related to the type of ballast required by the concrete preparation, there are batching stations with 3 silos, 4 silos and 5 silos, generally, 4 silos can meet the use requirement.

Water tank It is the equipment used to store the water for producing concrete, which is built by pouring during the installation base construction of concrete batching plant. The water supply pattern and volume of the water tank can be determined in accordance with the condition of the site.

Additive tank The tank is for storing liquid additives, which has become the necessary equipment of concrete batching plant with the widespread use of additives. It consists of feed inlet (1), tank body (2), liquid level display tube (3), ladder (4), return pipe (5), additive pump (6) and discharge tube (7), as shown in the diagram. The tank is cylindrical. The liquid level display tube is used to display the level of additive in the tank, which can prevent the additive overflowing when feeding material into the additive tank; when the level is very low, it can alert the user to add material into the tank in time. The additives are easy to precipitate, after a long period of time, it will form “sludge” at the bottom of the tank, the waste materials should be discharged, therefore, sewage discharge valve is set at the bottom of the tank. During the using process, in order to make the ingredients of liquid additive uniform and prevent precipitation, return pipe is set on the tank body. After the additive

pump starting, part of the additive pumped out is transported to additive weighing hopper to weigh, another part of the additive is sent back to the tank. The pumped additive has a certain pressure and forms impact force in the tank to make the additive dynamic, therefore, the precipitation of additive is prevented and the uniformity of the additive is kept, which is beneficial for improving the stability of the concrete quality.

Aggregate water-for-feed hopper It is a transition hopper and plays a role in provisionally storing aggregate, which shortens the work cycle time of the batching station and is an important guarantee for improving the productivity. Aggregate water-for-feed hopper consists of hopper cover (1), dustproof shade (2), hopper body (3), shaker (4), hopper door (5) and cylinder, as shown in the diagram. When the aggregate entering into the aggregate wait-for-feed hopper, there will be a strong impact force, therefore, removable liner plate or other wear resistant mechanisms are installed inside the Hopper 3. The Dustproof Shade 2 is used to decrease the dust in the aggregate wait-for-feed hopper swirling in the air.

The working process of the aggregate wait-for-feed hopper is that cylinder (6) drives the hopper door (5) to open, and the shake acts delayedly to fast discharge the aggregate in the hopper.

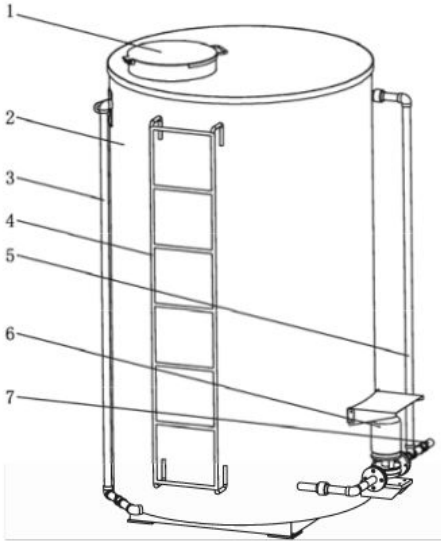

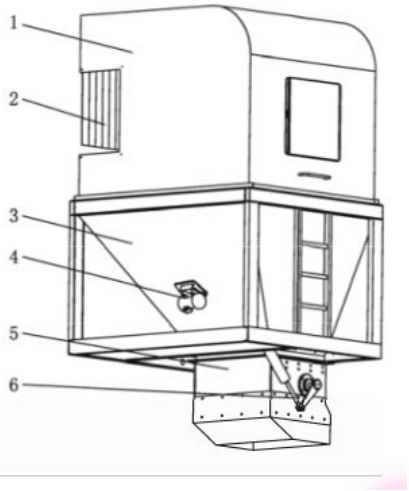

Additive tank Aggregate wait-for-feed hopper

Discharge hopper Discharge hopper is a transition hopper after the finished concrete is discharged from the mixer and before it falls into the mixing truck, which plays a provisional storage role for the finished concrete and a buffering role for the mixing truck, and can make the finished concrete be discharged as quickly as possible. It consists of hopper body (1), wear resistant liner plate (2), clamp (3) and rubber tube (4), as shown in the diagram.

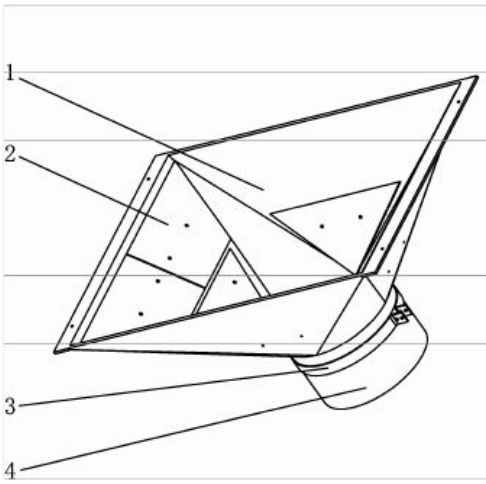

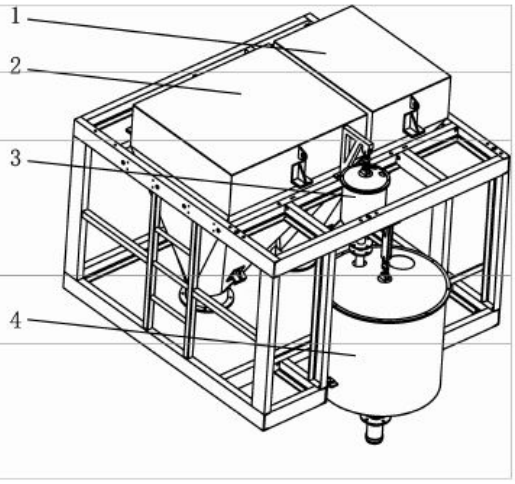

Discharge hopper Powder lot, water and liquid additive weighing

2.2.2 Weighing system

Weighing system consists of aggregate weighing and powder lot weighing (cement weighing 1 and admixture weighing 2), liquid additive weighing 3 and water weighing (as shown in the above diagram). Weighing system is one of the most important parts of the mixing equipment. It often adopts the method of weighing by weight, also adopts the method of weighing by volume (but it should be converted to weight given or indication). Currently, except the water and additive adopting the method of weighing by volume, other materials do not adopt.

According to GB/T10171-2005 Concrete Batching Plant (Station), the weighing accuracy of each material is shown in the below Table 2-2-2

Table 2-2-2 Material weighing accuracy table of the concrete batching plant

Material type	Periodic type	Continuous type
	Independent proportioning weighing or accumulative proportioning weighing accuracy in the range of equal to or larger than 30% of weighing range	Weighing range larger than 30% of the maximum weighing value
Proportion	±2% of (conventional) truth-value (it is ±3% when the maximum aggregate partical size ≥80mm)	2% of (conventional) truth-value
Cement	±1% of (conventional) truth-value or ±3% of full scale (take the larger value)	1% of (conventional) truth-value
Water		
Admixture		
Additive		

The scale can be divided into lever scale, lever electronic scale and electronic scale according to its specific power transmission way. At present, the technical performance of electronic scale has become mature, because of its small size, fast response, high sensitivity, easy matching with the microprocessor, realization of rough weighing, precise weighing, deducting the overcharge and supplementing the shortage, and other functions, it is widely promoted and used. However, when adopting electronic weighing device, necessary protective measures in the aspects of quakeproof, dampproof, dustproof and jamproof should be taken.

Industrial weighing terminal Load cell

All the batching plants of Zhengzhou Haomei adopt electronic scale. The weighing system mainly consists of weighing hopper, weighing sensor (as shown in the diagram), junction box, shielded cable and industrial weighing terminal (as shown in the diagram).

Aggregate weighing There are two weighing methods for aggregate weighing: accumulative weighing and independent weighing. The accumulative weighing device includes the hopper body, sensor, belt conveyor and other components. The hopper body is connected with the belt conveyor. Only after all the aggregate weighing completing can the belt conveyor start to run and convey all the aggregate into the hoisting devices (hoisting hopper and inclined belt conveyor). The independent weighing device consists of weighing hopper body, hopper door, sensor, cylinder and other parts. Before the weighing starting, the hopper door is closed, when the weighing starting, both hopper doors are opened. When the weight value of the aggregate reaches to some set value, one of the hopper doors will be closed， and the precise weighing of the aggregate will be conducted. When the weight value of the aggregate reaches to the set weighing value, both hopper doors will be closed, the weighing process is completed. After the cylinder of weighing hopper receives the signal of opening the door, the piston rod will act and the hopper doors are opened to discharge. After the scale is emptied (the signal received by the sensor is zero), the action of piston rod is delayed and the hopper doors are closed.

Powder lot weighing Powder lot weighing consists of weighing hopper, bracket, sensor, pneumatic butterfly valve (as shown in the diagram), red rubber tube, pneumatic ball vibrator (as shown in the diagram), material inlet, exhaust pipe and other parts. Because there is must dust and serious pollution in the cement and admixture which is easy to absorb water, the weighing of cement and admixture is generally conducted in sealed container. In order to make the weighing system independent, the connection between weighing hopper and other parts should be flexible connection to ensure the accuracy of weighing. At the beginning of weighing, the spiral conveyor receives the signal to start and convey the powdery material into weighing hopper. A part of air and dust reaches to dust collector through exhaust pipe. When the weight of powdery material reaches to the preset weight value, the spiral conveyor stops conveying the powdery material, the weighing is completed. When the pneumatic butterfly valve receives the discharge order, it opens the door to discharge. At the same time, pneumatic ball vibrator starts to vibrate to speed up the discharging. After the scale is emptied, the pneumatic butterfly valve defers its movement and closes the discharge opening to stop vibrating.

Pneumatic butterfly valve Pneumatic ball vibrator

Water weighing Water weighing consists of water inlet pipe (1), sensor (2), liquid additive discharge pipe (3), weighing hopper (4), pneumatic discharge butterfly valve(5), red rubber tube (6) and other parts, as shown in the below diagram. When the water weighing starts, the pump receives the signal to start, and pumps the water from water tank to weighing hopper. When the water weight reaches to the preset weight value, the pump stops working and the weighing is finished. When the

pneumatic discharge butterfly valve received the discharge order, it will act to open the door to discharge water. After the scale is emptied, the action of pneumatic discharge butterfly valve is delayed and the discharge opening is closed.

During the preparing process of concrete, correct realization of the designed water cement ratio is the key of guaranteeing the concrete quality. In order to accurately control the amount of the concrete, only providing the water weighing device with high accuracy is not enough, because the water contained in the gravel will enter into the mixer together with the gravel. If not considering the water contained in the gravel, the designed water cement ratio can't be realized. Only determining the moisture content of the gravel in advance and deducting it form the allocative water can ensure the accuracy of the concrete proportion. If adopting the gravel moisture content determinator, the moisture content of the gravel can be determined continuously to realize the automatic correction of the water content and sand amount.

Liquid additive weighing Liquid additive weighing consists of sensor (1), liquid additive feeding pipe (2), weighing hopper (3), pneumatic discharge butterfly valve (4), liquid additive discharge pipe (5) and other parts, as shown in the diagram. The additive is of relatively strong corrosivity, therefore, the weighing hopper is usually made of stainless steel. When the additive weighing starting, the additive pump receives the signal to start and pump the additive from the additive tank to the weighing hopper. When the water weight reaches to the preset weight value, the additive pump stops working, the weighing is completed. When the pneumatic discharge butterfly valve receives the discharge order (after the completion of water weighing), it acts and opens the door to discharge the additive into the water weighing hopper. After the scale is emptied, the action of pneumatic butterfly valve is delayed and the discharge opening is closed.

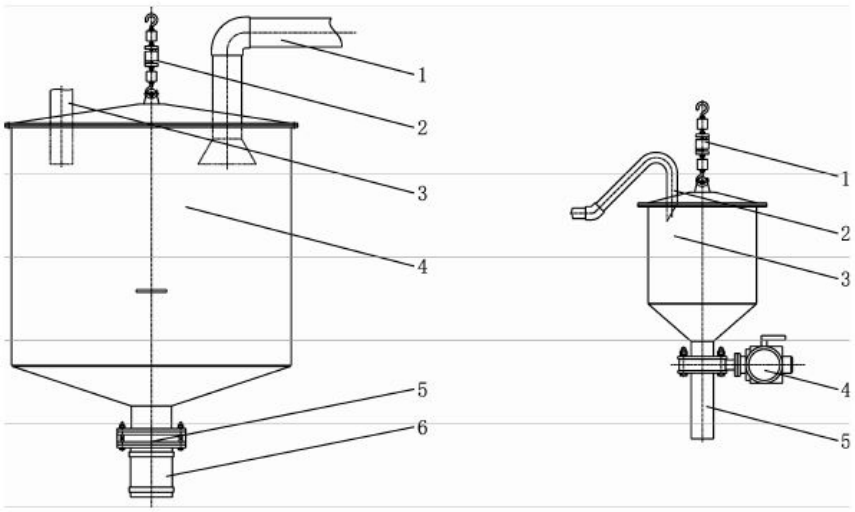

Water weighing Liquid additive weighing

2.2.3 Transport system

The transport system of the batching plant mainly consists of the transport of aggregate and powder lot. The transport of aggregate usually adopts belt conveyor or hoister; the transport of cement and admixture often adopt spiral conveyor and pneumatic transport. No matter transporting aggregate, cement and admixture, you should try your best to reduce the dust generated. The transport speed and efficiency is matched with the cycling time of the system.

Belt conveyor Belt conveyor is a transporting equipment widely used in the departments such as chemical industry, coal, metallurgy, mining and transportation and is suitable for conveying various granular, powdery and other granular materials with the loose density of $0.5t/m^3$~$2.5t/m^3$, and can also transport work pieces. The concrete batching plant

used flat belt conveyor and inclined belt conveyor to achieve the horizontal and inclined transport of ballast. In which, the inclined belt conveyor often adopts different shapes of conveying belts according to the actual site conditions, such as flat belt, herringbone belt and skirt belt. Its working angle of inclination is 2 ° ~ 60 °

The basic structure of flat belt conveyor is shown in the following diagram, it consists of adjusting screw rod (1), turnabout drum (2), grooved carrier roller (3), parallel lower carrier roller (4), conveyer belt (5), rack (6), gearing (7) and sweeper (8). The turnabout drum is used for changing the moving direction of conveyer belt or increasing the wrap angle between conveyer belt and transmission drum. The adjusting screw rod is used for tensioning the conveyer belt and adjusting the running state of conveyer belt to make it at the normal position. The carrier roller is used for supporting the conveyer belt and the material on the conveyer belt, to ensure the stable running of conveyer belt. The sweeper is used for sweeping the material adhered on the conveyer belt. The guide hopper is for adjusting the material falling point to make the material fall to the set position.

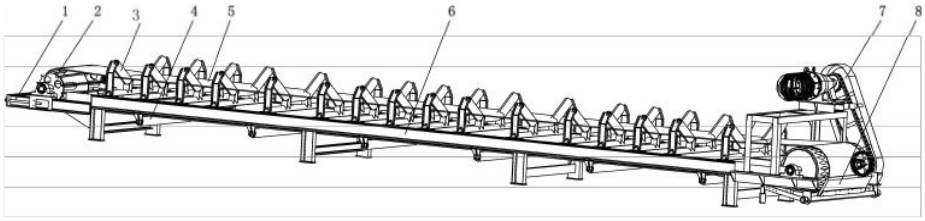

Flat belt conveyor

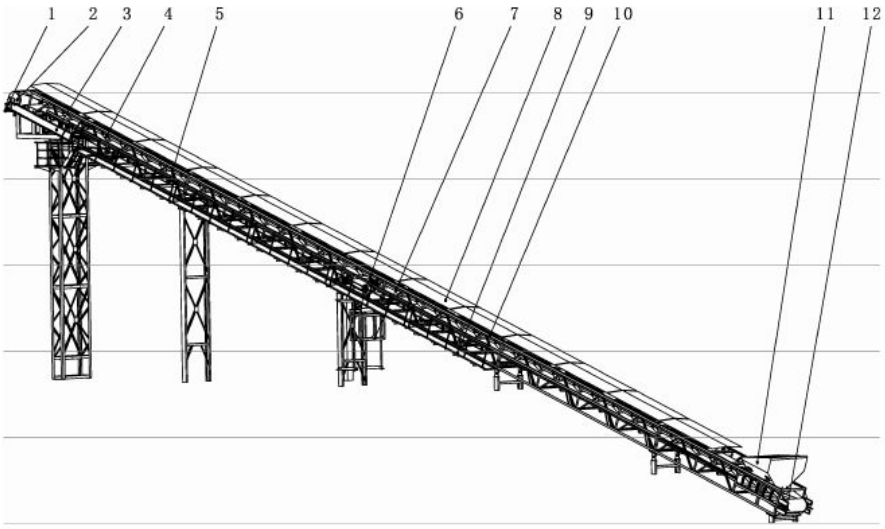

Inclined belt conveyor

The basic structure of inclined belt conveyor is shown in the following diagram, it consists of sweeper (1), gearing (2), rack (3), suspended carrier roller (4), parallel lower carrier roller (5), turnabout drum (6), tension device (7), engine cover (8), overhaul walkway (9), belt (10), material-receiving plate (11), adjusting screw rod (12) and emergency stop button (13). The tension device is for providing sufficient tension for conveyer belt to ensure that the frictional force between the conveyer belt and transmission drum can make the conveyer belt not slip, and adjusting the influence caused by the length change of conveyer belt. The engine cover plays a role in preventing dust and rain, because the wind is easy to blow the dust in the aggregate to pollute the environment, and the conveyer belt splashed wet in rainy day will make the belt slip. The overhaul walkway on both sides of the inclined belt conveyor is convenient for examining and repairing the belt conveyor. The

emergency stop button is the safety protection device for the belt conveyor operating and is set at the head and end parts of belt conveyor; when there is failure or accident during the belt conveyor running, pressing the button can stop the belt urgently.

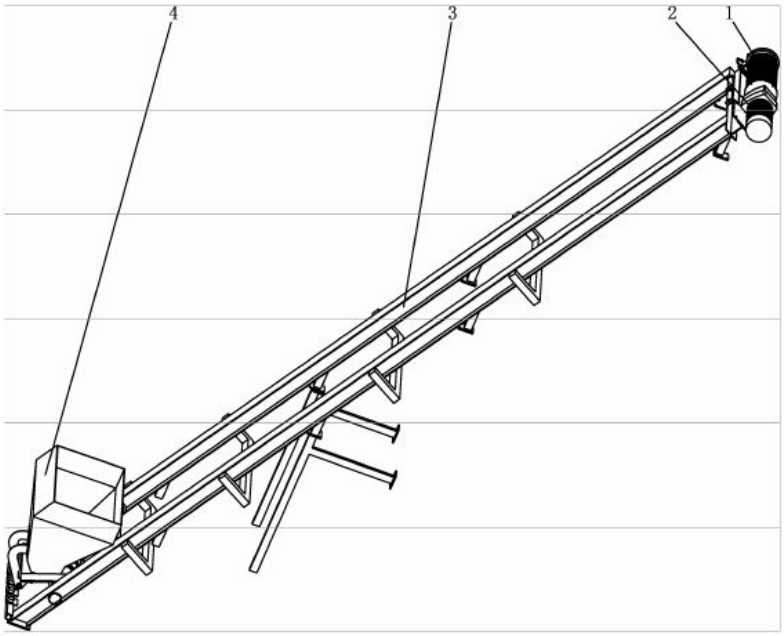

Elevator

Elevator At the narrow construction sites, bucket elevator is the most appropriate lifting equipment for transporting aggregate to the material storage device of concrete batching plant. The concrete batching plant of Zhengzhou Haomei adopts bucket elevator with small floor area and high hoisting power. The effective volume of bucket elevator is 1.6 times of discharge volume at least. The discharge methods of bucket elevator are mainly tipping type and opening door at the bottom, they realize the purpose of lifting the hopper through braking the winch and traction of pulley block and steel wire rope. The double steel wire rope driving is often used for large and medium sized batching plant. Most of the small sized batching plant adopts suspended single steel wire rope driving or installs movable pulley on the hopper to drive. The hoisting winch is drove by a set of motor. At the large sized batching plant, it is drove by two sets of motor, the motor shafts adopt forced synchronization. The hoisting speed of hopper is generally 0.4m/s ~0.5m/s. In order to improve the conveying productivity of hopper, frequency control of motor speed or double speed motor can also be used, thus, there are various working manners can be selected, such as starting with low speed-hoisting with high speed, falling with high speed-taking place with low speed.

Elevator consists of winch (1), motor (2), guide rail and bracket (3), bucket elevator (4) and steel wire rope, as shown in the above diagram.

Spiral conveyor It conveys the material by dint of the rotary spiral blade or the trough that has interior helicoids and can rotate by itself. The powdery material used in concrete batching plant (station) is conveyed by spiral conveyor which controls the powdery material feeding through controlling the rotation and stop of spiral blade. The conveying should be conducted in completely sealed cavity, to avoid polluting the environment and material agglomeration caused by damp. Generally, tubular spiral conveyor is adopted to convey cement and admixture. The basic structure of tubular spiral conveyor is shown in the following diagram. It can convey material horizontally, vertically and slantly. The conveying productivity of powdery material is related to pitch and rotation speed, and volume weight of material conveyed and loading degree. In order to improve delivery capacity, the method of variable pitch conveying blade is adopted. The pitch of feeding section at the bottom is smaller than that of the conveying section, the filling volume at the feeding section is large and decreases with the pitch increases, which can prevent the powdery material with high flowability back flowing during conveying.

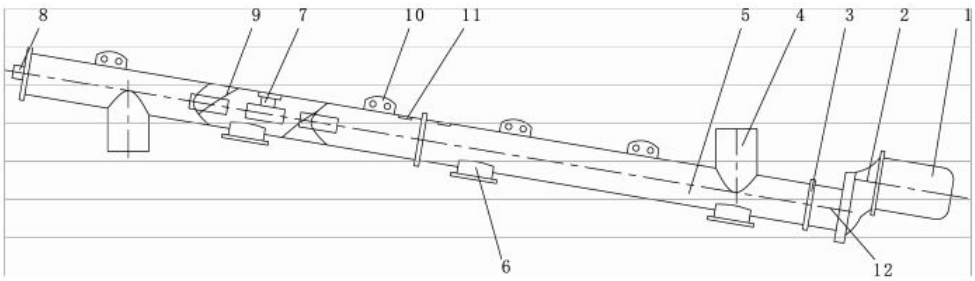

1. Motor MT 2. Gear reducer M1 3. Gear reducer shaft seal XUK 4. Feed inlet XBC 5. Tubular shell 6. Viewport XKA 7. Intermediate bearing XLR 8. Outlet end bearing XTA 9. Helical blade 10. Hoisting eye Xkg 11.Serial number -- 12. Inlet end bearing XTB

Tubular spiral conveyor

Spiral conveyor generally works under a certain inclination angle which can reach to 45 °, the larger angle can reach to 60 °. The spiral conveyors of different length can be obtained through increasing and decreasing the standard section, the maximum length of each spiral should not be more than 14m. The longer conveying distance can be achieved by the method of spiral relay. The relatively long spiral tube is required to use intermediate support and coupling which can be lubricated in order to install.

The spiral pipe diameter of conveying spiral for conveying cement and admixture is φ160 mm~φ325mm, the conveying productivity is generally 20t/h~100t/h, its rotation speed range is generally 90r/min ~300r/min. The loading condition of spiral conveyor during working is related to discharge condition and material status, the filling coefficient of spiral tube is about 30%~50%.

The wear condition of spiral conveyor is related to the material conveyed. After the spiral is worn, the gap between spiral superface and spiral tube increases (the gap between the blade and tube wall is about 10mm under normal condition), the conveying efficiency reduces, and such phenomena as jamming, sticking and blockage of spiral blade and burnout of motor often occur.

In the areas with very high air humidity, when the spiral conveyor is placed idly for a period of time, the material stored in the spiral conveyor should be discharged completely. The method is closing the manual butterfly valve of feed inlet of spiral conveyor and starting the spiral conveyor motor to run for several minutes.

Pneumatic transport Pneumatic transport is mainly for conveying powdery material. The cement and admixture are generally transported by the transport system of bulk cement transport vehicle. The bulk powdery material is blown into

suspended state by compressed air during the conveying process, the mixed gas is transported into the tank along the pipe, the dust collector on silo top collects the dust in the gas spilled from the tank. When using bagged cement, a set of pneumatic suction device for bagged cement is required to conduct pneumatic transport.

2.2.4 Liquid supply system

Liquid supply system includes the liquid additive supply system and water supply system. Concrete mixing water generally adopts clean water, and can also partly adopt the industrial water recovered from the flushing equipment. After weighing, the water can flow into the mixer independently by gravity, in addition, you can install a set of pump below the water weighing hopper and conduct pressurized water supply to the mixer, which can play a role in supplying water fast and cleaning the mixing device. According to GB/T10171-2005, the time of supplying water from the periodic concrete batching plant (station) to the matched mixer should be consistent with the requirements of Table 2-2-4.

Table 2-2-4 Water supply time table

Nominal capacity of matched main machine (L)	Type	
	Forced type (S)	Self-falling type (S)
500≤L≤1500	< 18	< 20
1500< L≤2000	< 20	< 25
2000< L≤4000	< 22	< 30
4000< L≤6000	< 25	< 35

2.2.5 Pneumatic system

Most mechanism of the concrete batching plant adopts gas drive which has the characteristics of low cost and non-pollution. The basic principle of the pneumatic system is shown in the diagram, which consists of container valve (1), filter air relief valve (2), flow aided air cushion (3), pneumatic butterfly valve (4), pneumatic ball vibrator (5), air compressor (6), pneumatic triplet (7), air storage tank(8), cylinder (9) and air tube (10).

The high-pressure gas from the air compressor flows into magnetic valve after the treatment of pneumatic triplet; when the magnetic valve receives the control signal to connect the corresponding circuit, the compressed air enters into the drive elements (cylinder, vibrator and flow aided air cushion) and finishes the corresponding actions (open and close of material door, vibration starting and stopping, arch breaking starting and stopping). The working pressure should be higher than 0.4MPa when the pneumatic component works separately or simultaneously.

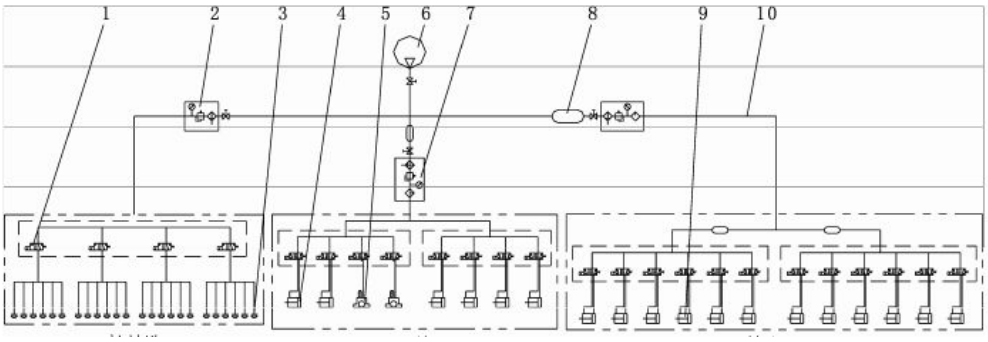

Powder lot tank Main building Batching station

Schematic diagram of pneumatic system

The control mode of air compressor can be divided into two kinds: pneumatic adjustment control (semi-automatic type) and electric adjustment control (full-automatic type). When the discharge pressure of air compressor of electric adjustment control reaches to the upper limit pressure, the air compressor discharges to operate, when it reaches to lower limit pressure, it loads to operate. The air compressor of electric adjustment control is usually used in the air system with large air consumption and frequent discharging and loading. The air compressor of pneumatic adjustment control uses the pressure regulating valve to control the air compressor to load or discharge. Electric adjustment control (full-automatic type): when the discharge pressure of air compressor reaches to the upper limit pressure, the air compressor stops running, when it reaches to the lower limit pressure, the air compressor starts to run, which is usually used in the system with small air consumption and infrequent discharging and loading.

When selecting the installation place of air compressor, you have to make sure that the ambient air is clean and the humidity is low, in order to guarantee the quality of air inhaled. Meanwhile, you should strictly follow the regulation about noise restriction.

The pneumatic triplet is shown in the following figure, which play the role of filtering, reducing pressure and oil spraying in the pneumatic system. Filtering refers to separate the condensed water, oil sludge and other impurities from the compressed air to make the compressed air purified initially; reducing pressure refers to adjust the outlet pressure by triplet; oil spraying refers to spray oil mist to lubricate the air valve and other parts.

Piston type air compressor Pneumatic triplet

2.2.6 Mixing system

This system is for mixing the weighed gravel, cement, water, additive and other materials uniformly in the mixer to generate the finished concrete of stipulated strength. The design of concrete proportioning is based on that the fine aggregate fills in the gaps of coarse aggregate exactly and the cement colloid evenly spreads on the surface of fine and coarse aggregate, therefore, only mixing the materials uniformly can obtain the most dense concrete.

The compulsory mixer mixes the material compulsively with the aid of mixing blade, not by the action of gravity. The mixing blade can be shovel slice type and helical ribbon type. The blade can rotate around a horizontal axis (horizontal shaft type) and a vertical axis (vertical shaft type).The mixing strength can be determined by the speed of blade. There are several general types: vertical vortex slurry mixer, vertical planet vortex slurry mixer, single horizontal shaft mixer, continuous mixer

and double horizontal shaft mixer.

The double-horizontal shaft mixer is developed on the basis of single horizontal shaft mixer, there are two horizontal and synchronal rotary mixing shafts, the rotation directions of the double shaft are opposite. The spiral driving directions are also opposite, which makes the materials form backflow in the mixing drum, thus, the mixing is more forceful. There are two common discharge systems: hydraulic drive discharge system and pneumatic discharge system. When the movement of discharge door is automatic, three states including full open, full close and semi-open are set. The hydraulic drive discharge system consists of discharge door, hydrocylinder, hydraulic oil pump and limit approach switch, such as MAO2250/1500, MAO3000/2000 and MAO4500/3000 of Zhuhai SICOMA; the pneumatic discharge system consists of discharge door, cylinder, magnetic valve and limit approach switch, such as JS2000 and JS3000 of Zhengzhou Haomei and DKX2.25 and DKX3.0 of Tianjin BHS.

The main mixer of Zhengzhou Haomei is researched and produced through taking advantage of the scientific research achievements in Hydromechanics and Tribology. There is an angle of 60° between the two mixing arms. The mixing arm and blade form streamline, such unique structure design can realize the axial, stagger and circulatory flow of material, and achieve good mixing effect and high efficiency. It consists of gearing, shaft end sealing, cylinder and lining plate components, lubricating device, covering and water pipe distributing devices, discharging system and mixing device, as shown in the picture.

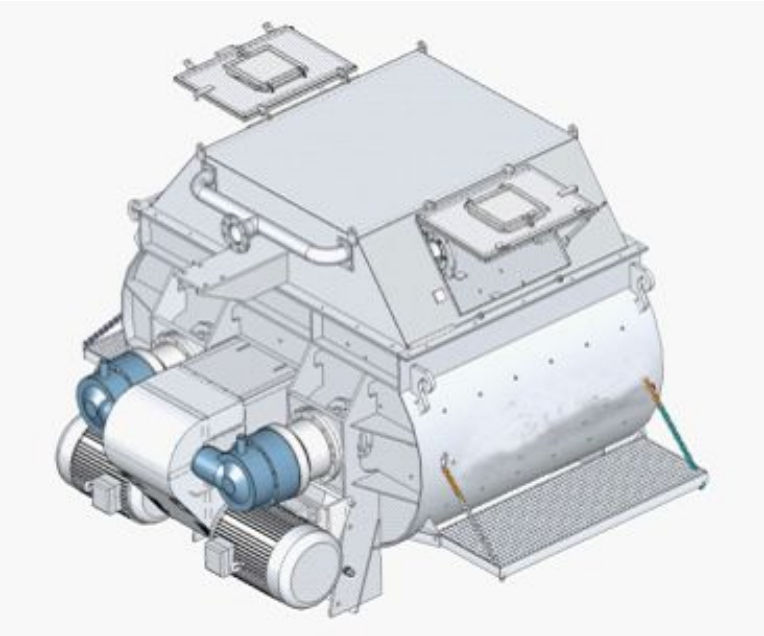

Double-horizontal shaft mixer JS2000

The gearing is shown in the diagram. V belt drives the motor and the planetary reducer reduces the speed of the motor, the motor transfers the power to the main mixing shaft through spline shaft and spline shaft sleeve; meanwhile, a synchronous drive shaft is connected between the two reducers to ensure the synchronization of the two main mixing shafts.

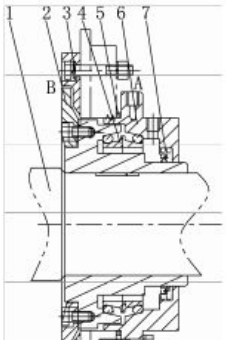

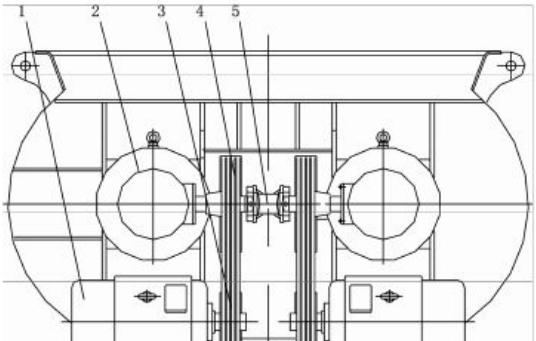

1. Main mixing shaft 2. Dust cover
3. Wearing ring 4. Float ring
5. Sealing ring 6. Locating ring
7. O shape ring

Shaft end sealing diagram

1. Motor 2. Planetary reducer 3. Small belt pulley 4. Big belt pulley 5. Synchronous drive shaft

Driving system diagram

The main shaft of the horizontal shaft concrete batching plant will be fully immersed into the gravel and cement with strong frictional force during the working process, therefore, if there isn't effective shaft end sealing measure, the journal and bearing of the main shaft will be worn out soon. The shaft end sealing is shown in the above diagram. Under the pressure of pump, the sealing oil inflows from Opening A and outflows from Opening B to the mixer, the pressure oil will from high pressure protective layer at the shaft end to prevent slurry invading into the shaft end, so as to protect the mixing shaft end. If there is failure in lubricating system, the shaft end will be short of sufficient pressure oil, the slurry will enter into the shaft end to destroy the sealing system, resulting in oil leakage or slurry leakage and wear of mixing shaft.

Aiming at the situation that the distributing valve of lubricating system is easy to be blocked, Zhengzhou Haomei adopts the method that four electric lubricating pumps pump the oil into the four shaft end directly, thus, even if there is one lubricating point is blocked, other lubricating points will not be influenced. The lubricating system supplies oil for the shaft end sealing discontinuously to keep the favorable sealing of shaft end. Manually add lubricating oil to the parts needing lubrication to keep the lubrication, heat elimination and sealing of bearing pedestal and bearing and prevent the slurry corroding to protect the mixing shaft.

The mixer cylinder is ω-shaped binocular made of wide and thick steel plate, with strong strength under the support of framework specially designed and made. The supporting part can ensure the sufficient rigidity of cylinder body to guarantee the parallelism of double- horizontal shaft and concentricity of single shaft. There is an overhaul platform respectively at each side, which can be drawn back according to the needs and is convenient for operating and maintaining. In order to prevent the cylinder wearing, the inside and side of the mixing cylinder is equipped with lining plate which is fixed on the cylinder body by countersunk head screw. For the areas with strong attrition, rhombic wear resistant lining plate is adopted to ensure the interchange and wear-resisting of lining plate.

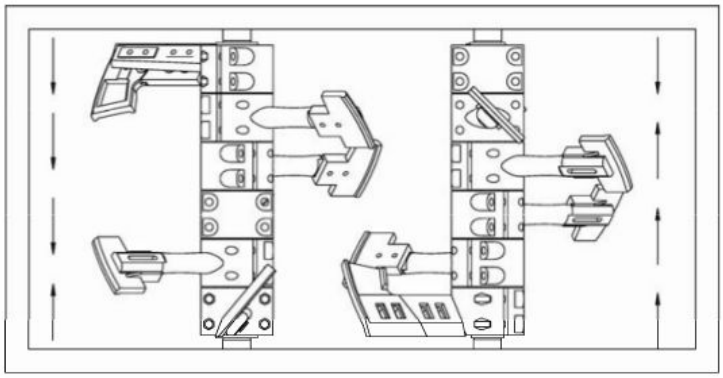

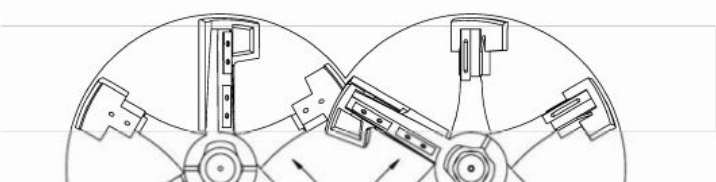

Diagram 3-32 Schematic diagram of movement direction of mixed material

The mixing mechanism is the hard core of mixer, which is related to the concrete mixing quality, productivity and maintenance cost. The function of mixing mechanism is mixing the materials fed into the mixer such as sand, stone, cement, water, additive and admixture to uniform concrete with favorable construction performance (workability).

The layout principles of mixing blade are:

1. Make the materials flow in the mixer reasonably, and mix the materials into uniform concrete in the shortest mixing time;

2. During the rotating process of the mixing shaft, try your best to make the number of blade involving in the mixing equal, in order to achieve the purpose of making the load uniform and reducing the impact.

3. Distribute the materials in the cylinder uniformly and avoid material piling at the local section of the cylinder to prevent the damage of some blade and mixing arm caused by over loading.

The main mixer of Zhengzhou Haomei is designed according to the above principles, as shown in the diagram, the materials form a large cycle in the cylinder under the push of blade. The blade on the left shaft pushes the materials to the right, the blade on the right shaft pushes the materials to the left, thus, a small cycle forms between the two shafts. The material piling between the two shafts is relatively high, the material on the stack top continuously rolls downwards along the stack to participate in the material circulation. It can be seen that the mixing movement of such kind of mixer is very drastic, which can produce qualified concrete in a short time.

2.2.7 Main building framework

The main building framework adopts steel structure and consists of building roof (1), stairway and fence (2), weighing floor (3), mixing floor (4) and outrigger from the top to bottom, as shown in the following diagram. The building roof is the for supporting the packing material; the stairway and fence is walkway for the managers walking form the mixing floor to weighing floor; the weighing floor is for supporting cement, admixture, liquid additive and water weighing system and aggregate wait-for-feeding hopper; the mixing floor is for supporting the mixer and relative mechanism; the lower part of mixing floor is passage for mixer truck passing in and out.

After installation of the main building framework and other interior mechanism completing, the exterior of the framework should be packed by color steel coreboard, which not only makes the appearance beautiful, but also has the function of cold prevention and heat insulation.

2.2.8 Control room and electric control system

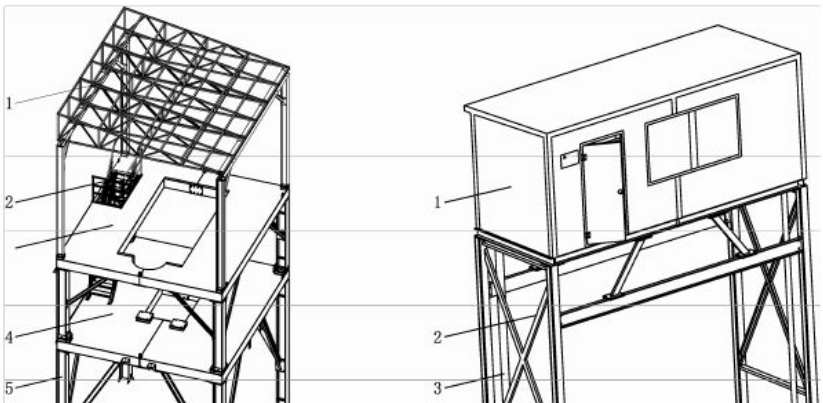

Main building framework Control room and bracket

1. Control room

Control room is the place for the operator operating and managing the batching plant, which consists of control room noumenon (1), bracket (2) and printed receipt transfer tube (3), as shown in the above diagram. The inside of control room noumenon is equipped with console, electric control cabinet, display device, monitor, air-conditioner, printer and so on. There are control switch, button, weighing instrument and ammeter, etc. of various kinds of batching plant on the console; the monitor displays the equipment operating conditions of the monitored places to be convenient for the management of operators; the bracket is for supporting the control room and providing space for mixer truck passing in and out; the printed receipt transfer tube is used for transferring the concrete delivery order from the control room to the mixer truck driver.

The working environment of control room is quiet, comfortable, commodious and bright and its appearance is beautiful. In order to avoid the vibration of the mixer and other equipment transferring to control room and influencing the normal working of electric components, the control room is isolated from the main building framework generally.

2. Icon instruction of control system

(1) Console

The console consists of IPC, display device, operation panel, weighing terminal, central processing unit (PLC), intermediate relay, ammeter, alarm, UPS and other auxiliary devices.

The layout of instrument board is shown in diagram 2.

The layout of operation panel is shown in diagram 3.

(2) Power cabinet

The electronic components of power cabinet mainly include the main power switch, circuit breaker, contactor, current transformer, isolation transformer, control transformer, fuse, DC switching power supply and RC suppressor module.

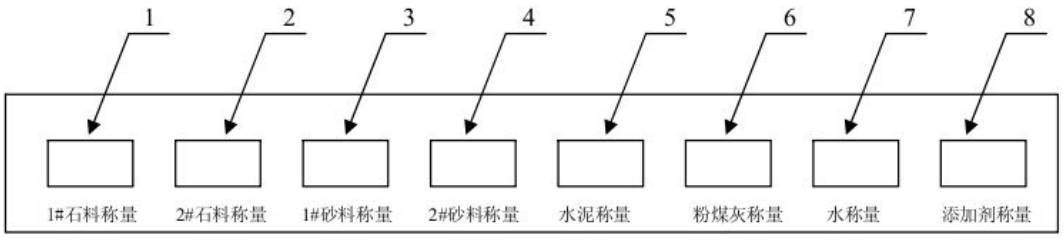

Diagram 2

In Diagram 2:

1	1# stone material weighing instrument	5	Cement weighing instrument
2	2# stone material weighing instrument	6	Fly ash weighing instrument

3	1# sand aggregate weighing instrument	7	Water weighing instrument
4	2# sand aggregate weighing instrument	8	Additive weighing instrument

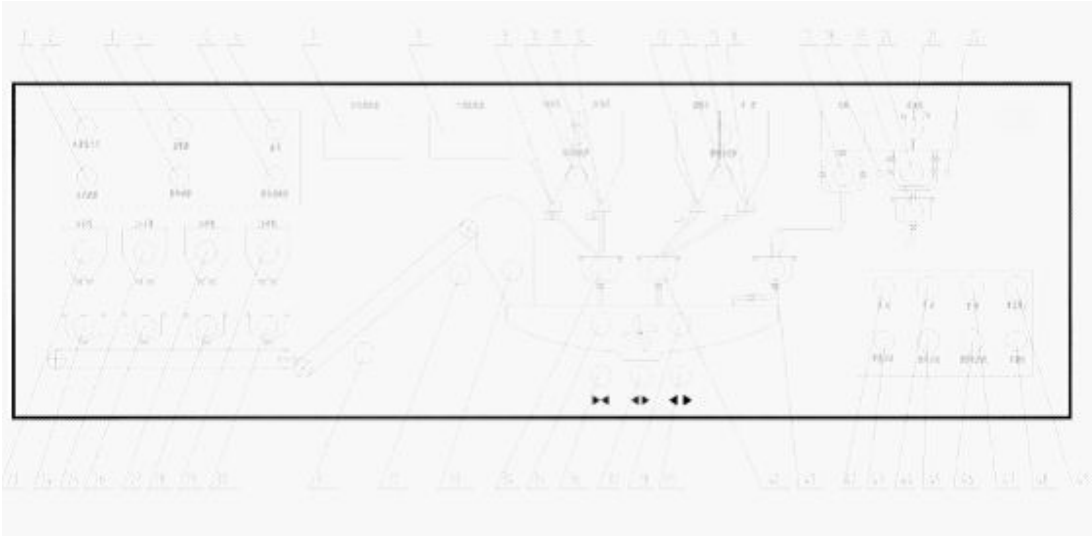

In Diagram 3:

1	Cement arch broken button	2	Power light	3	Powder arch broken button
4	Alarm	5	Powdery additive arch broken button	6	Emergency button
7	1# mixing motor amperemeter	8	2# mixing motor amperemeter	9	1# cement feeding indicator lamp
10	Cement scale feeding button	11	Cement silo select key switch	12	2# cement feeding indicator lamp
13	Fly ash feeding indicator lamp	14	Powder scale feeding button	15	Powder silo select key switch
16	Mineral powder feeding indicator lamp	17	Water feeding button	18	1# additive feeding indicator lamp
19	Additive scale discharging button	20	Additive scale feeding button	21	Additive select key switch
22	2# additive feeding indicator lamp	23	1# stone material scale feeding button	24	1# stone material scale discharging button
25	2# stone material scale feeding button	26	2# stone material scale discharging button	27	1# sand aggregate scale feeding button
28	1# sand aggregate scale discharging button	29	2# stone material scale feeding button	30	2# sand aggregate scale discharging button
31	Conveyor belt start button	32	Conveyor belt stop button	33	Wait-for-feed hopper discharging button
34	Cement scale discharging button	35	Mixing motor start button	36	Discharging door close button
37	Discharging door semi-open button	38	Mixing motor stop button	39	Discharging door full open button
40	Powder scale discharging button	41	Water scale discharging button	42	Automatic button
43	Single-plate start button	44	Manual button	45	Cycle start button
46	Mixer washing button	47	Suspension button	48	Truck full bell button
49	Emergency stop button				

2.2.9 Dust removal

The dust removal system consists of three parts, which are respectively dust removal when weighing and discharging the cement and admixture, dust removal when bulk cement truck feeding the material into the powder lot tank and dust removal when inclined belt conveyor charging the material into the aggregate wait-for-feed hopper.

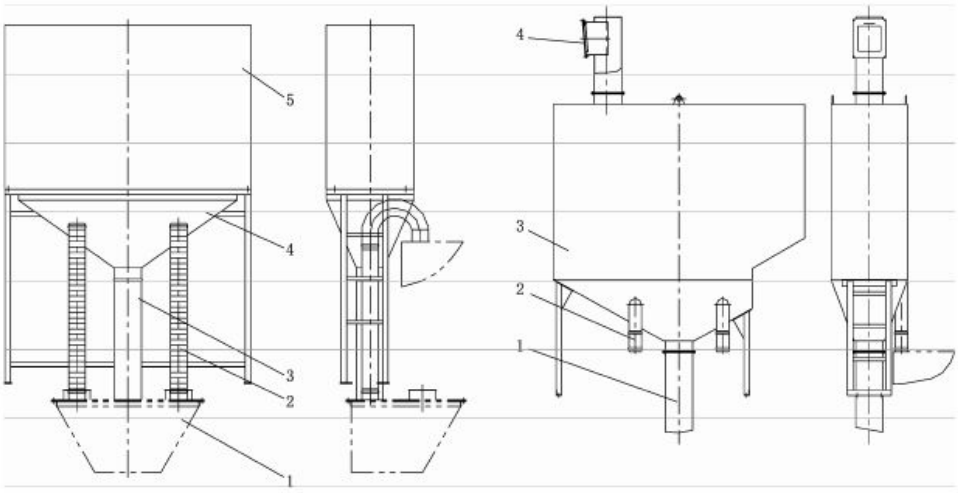

1. Transition hopper leading to the main machine
2. Corrugated pipe leading to weighing hopper
3. Connecting tube between the sack and mixer
4. Canvas bag 5. Canvas bag cover

1. Connecting tube between the sack and mixer
2. Rubber tube leading to weighing hopper
3. Box 4. One-way air entry

Sack type dust removal

Open box dust removal

There are a variety of dust removal methods when weighing and discharging the cement and admixture, such as sack type dust removal, open box dust removal and forced dust removal. Sack type dust removal takes full advantage of the retractility and leakproofness of sack. The sack is made of canvas with simple structure and low cost, which can effectively avoid the dust leaking and eliminate the positive and negative pressure of the system. The effect is obvious at the initial stage of installation, while after a period of time, if the dirt retention on the sack isn't cleaned, the dust removal effect will be poor, so regular dust cleaning is necessary. Open box dust removal is to use box to collect dust and eliminate the negative pressure generated when the mixer discharging through the one-way air suction port on the box top. The structure of forced dust removal is relatively complicated and costly, which can effectively remove the dust generated when weighing and discharging the cement and admixture. However, it is easy to produce positive and negative pressure, and thus influencing the weighing accuracy of cement and admixture. When using forced dust removal, we install a set of negative pressure valve at the upper cover of the main mixer to eliminate the negative pressure generated when the main mixer discharging.

Chapter 3 Operation and Maintenance of Concrete Batching Plant

3.1Equipment Startup

3.1.1Examination and preparation before startup

1. Check whether all the switches on the electrical control console are in the normal position;
2. Check whether the belts of the proportioning machine and belt conveyor are normal;
3. Check whether the position limit switch and proximity switch of the access door and discharge door of the mixer are normal;
4. Check whether the lubricating grease in the Centralized lubricating oil barrel is sufficient;

5. Check whether the lubricating oil for other running parts of the batching plant is sufficient;

6. Check whether the coupling bolts of each interconnecting piece are tight;

7. Check whether the manual butterfly of the powder lot tank is opened;

8. Check whether the supply pipelines of air, water and additive are normal;

9. Check whether the aggregate, powder, water and additive are enough;

10. Check whether all the switches in the strong electric cabinet are switched on before operating the batching plant;

11. Turn on the power rotary knob on the console, at this time, the power indicating lamp should be lighted up; press down the start button (on the cabinet door) of the air compressor to check whether the air pressure is more than 0.4MPa;

12. Turn on the power of the computer to start the computer and operate the monitoring program, and set the proportion to prepare for producing the concrete.

3.2 Operation of Control System

3.2.1 Preparation before starting up and production

1. Startup and system login

Turn off the main power switch and other circuit breakers required in the power cabinet, close the cabinet door and rotate the all-purpose change-over switch on the door to observe whether the voltage of each phase is normal.

Rotate the power switch on the door of the power cabinet to the position “ON（1）”, the console is powered on, the power indicating lamp on the panel is lighted up, the weighing terminal instrument realizes power-on initialization (for the basic parameter setting and calibration of the weighing terminal, please refer to the instruction book of terminal).

Start the displayer and the host industrial personal computer, the operating system enters into wallpaper status. Find out the shortcut icon of the software for production control and open the software by double-click. After detecting and collecting the onsite position switch, material level switch and sensor signal, the software enters into the main interface of monitoring, as shown in Picture 5.

If you want to enter into the software for any operation, you must login in firstly. The identity of the users is divided into two kinds, if you login in through the administrator user, you can set the administration and use authorities of each part of the system; if you login in through the operator user, you can only conduct the stipulated operational projects.

Use the mouse to click the button “Operator Login” on the monitoring interface and enter the user name and password in the system login window (as shown in Picture 4). The user name uniformly provided to the users presently is “a”, the password acquiesced in is empty, which can also be set by the users themselves.

Picture 4

2. Parameters needed to set for main monitoring interface and operating

As shown in Picture 5, the main content of the main monitoring interface is the animation simulating the production flow and status. At the corresponding positions of the flow in the picture, there are buttons controlled by mouse. The meanings of the parameters at the upper left corner are as follows:

- Half-open time —— refers to the residence time of discharge door at the half-open position when the mixer automatically discharging.
- Full-open time —— refers to the residence time of discharge door at the full-open position when the mixer automatically discharging.
- Aggregate time —— refers to the time from all the aggregate being discharged from the aggregate weighing hopper to all the aggregate entering into the wait-for-feed hopper.
- Wait-for-feed hopper —— refers to the residence time of the discharge door at the door-open position when the wait-for-feed hopper discharging.
- Mixing time —— refers to the time required for the material being mixed in the mixer to reach to the quality requirements.

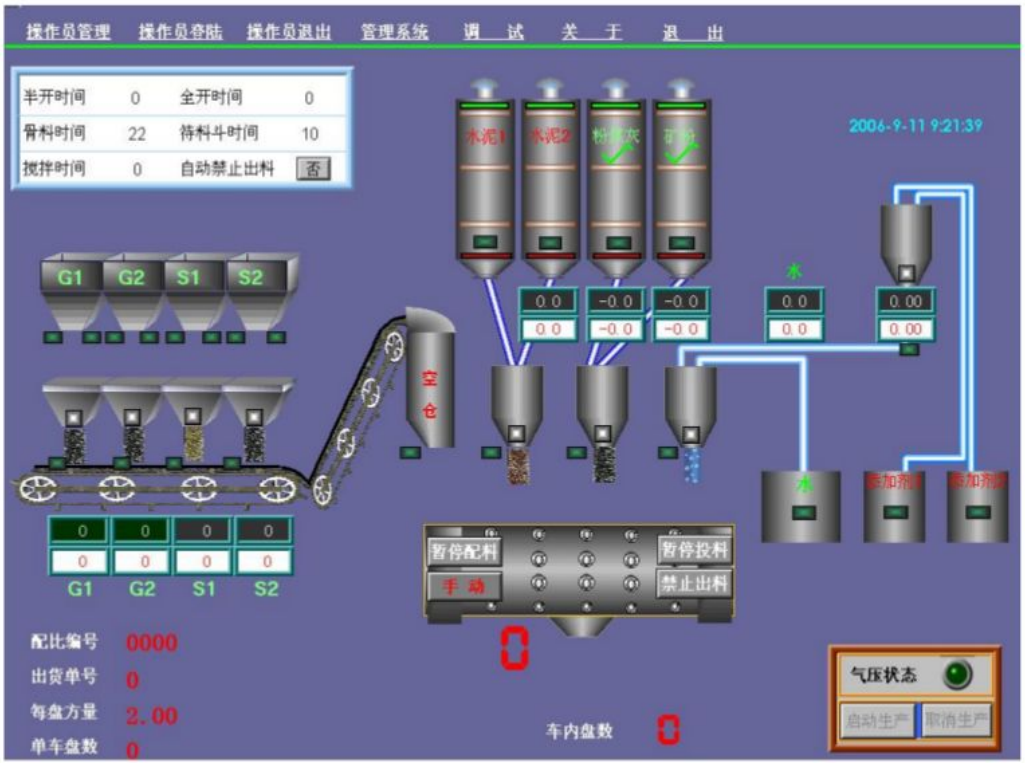

Picture 5 Main monitoring interface

Method for altering the above mentioned parameters: use the mouse to double click the data beside the corresponding mark, then modification dialog box pops up, enter new parameters in the dialog box and click the “OK” button.

There are four parameters shown at the lower left corner：proportioning number, delivery order number, volume of each plate and plate number of single truck, which are the data related to this batching plant. When the production data is transmitted from the upper computer, these data will be changed correspondingly, so as to judge whether the data transmitting is successful.

On the monitoring interface, click the button “Debugging” in the top line, open the debugging interface (as shown in Picture 6). At the upper part of the debugging interface are the parameters about the batching scale, at the lower part of the debugging interface are the parameters about aggregate proportion scale, their meanings are as follows:

● Pulsing opening door time of fine weighing of aggregate ---- refers to the time of aggregate opening the door at fine weighing stage, the unit is millisecond.

●Adjustment of feeding sequence ---- refers to the discharge sequence of aggregate weighing hopper after the aggregate proportion completing.

● Adjustment of feeding interval ---- refers to the discharge interval of aggregate weighing hopper. For example: the interval between Aggregate 1 and Aggregate 2 is 9 seconds, which refers to that Aggregate 2 begins to discharge 9 seconds after Aggregate 1 discharging.

● Out-of-tolerance suspension setting ---- refers to set a maximal error value allowable in the proportion process, if the error exceeds this value, the program will suspend, and a dialog box pops up, when manually click the dialog box to affirm, the program will continue to execute.

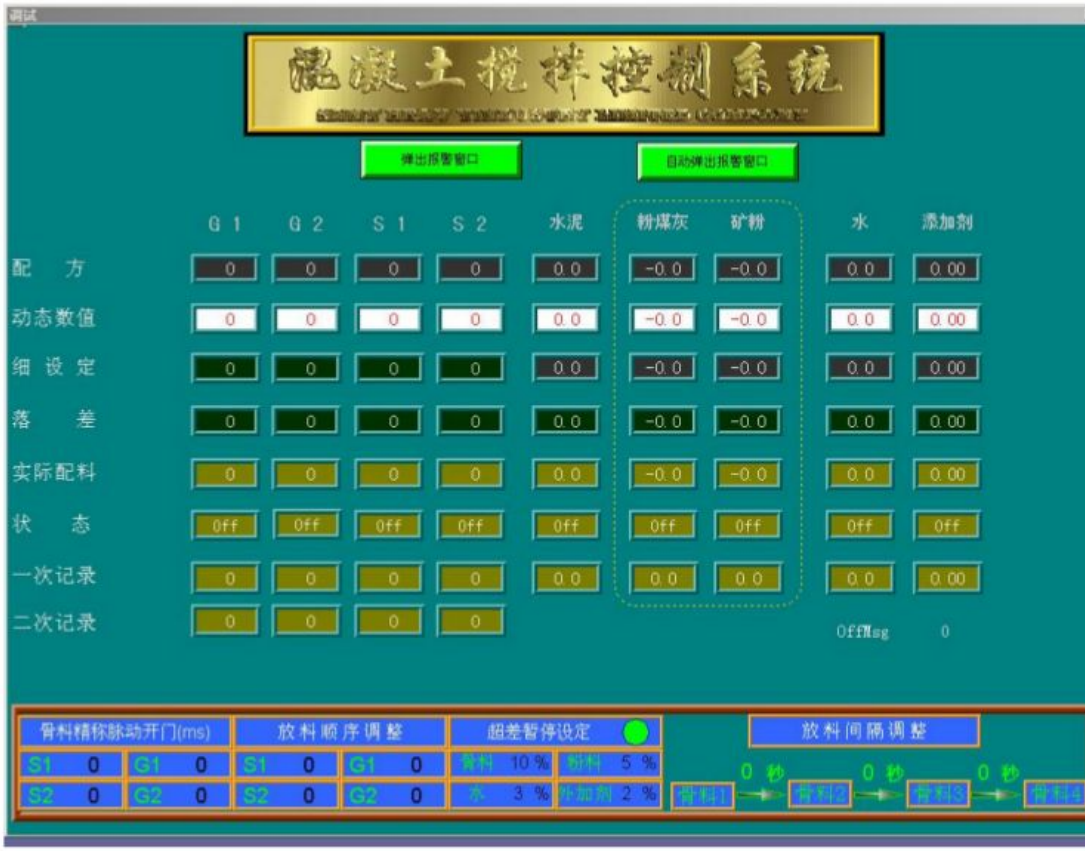

Picture 6 Debugging interface

Among the parameters of the batching scale, we should focus on the fine set quantification and head drop. The fine set quantification is suitable for the control mode with two different batching speeds, which are rapid batching and slow batching. The fine set quantification refers to set the volume of the slow batching. Head drop is also named the volume of feeding stopped in advance, which refers to that when the system detects the amount of material falling into has reached the target amount and sends the signal of stopping batching, because it needs a certain time form the signal sending to the shut of the door for material falling into, the actual amount of material falling into is always larger than the target amount. In order to compensate for this part of extra materials, the door is required to be shut up before the batching reaches the target amount.

We call this part as head drop.

Setting strategy: the setting of fine set quantification should give consideration to both batching precision and efficiency. In order to achieve the batching precision, there must be a part of time for executing slow batching in the process, in addition, for giving consideration to efficiency, the time for slow batching must be not too long; the head drop setting should be estimated in advance according to the batching condition, in the production process, the program will detect the batching data and adjust automatically.

Setting method: Method I, click the right button at the discharge opening of the batching scale on the monitoring interface, select the corresponding menu to set; Method II, open the debugging interface (as shown in Picture 6), click the corresponding positions to set; Method III, set on the instrument.

Explanation: powder lot scale and liquid material scale are not provided with slow batching process.

3. Method for Data Setting and Downloading in Production

On the monitoring interface, click “Management Syster Management System name (the common name is “a”) and the password, enter into the main interface of management software, as shown in Picture 7.

The main role of data management software is collecting and managing the batching data, customer information and other data. In production, we must firstly transfer the formula, the volume of each truck, the plate number of each truck and other data to the weighing terminal instrumentation and PLC, we also need to make these data and customer information linked together. There are two patterns for such work, one is task list pattern, which is the way of editing the production tasks into a task list; another is non-task list pattern, that is, directly enter the relevant data on the main interface.

Before this work, there is a job should have been done firstly, that is, the entry of data in the database has been completed. In the initial use of the batching plant management system, all the required product data should be systematically maintained (see the management system instruction for specific operations), the so-called "maintenance" is to entre and check the required data to ensure their completeness and accuracy. Data maintenance mainly includes batching data, customer data, product data, staff and truck data, etc., before production, the work should be completed.

Task list pattern

To download data by the task list pattern, the user should firstly edit a task list, the method for editing task list is introduced in detail in the explanation of data management system. A task list is equivalent to a production list transmitted by production scheduling. In this task list, there are batching data, contract number, engineering data and various information.

To start the production of a truck of material or a plate of material, click “Newly Add” button in the edit area of data management main interface to add a new delivery order, (Note: if the task list and the volume of single truck don't change, the production can be started directly, only needing change the truck number before printing delivery order). At the left upper corner of edit area, mark “√” in the box before “Task Mode” to select the task mode. Then, select the task name in the drop-down list under “Task Mode”, now, you can see the related data of the task list appearing at the corresponding position of edit area. Set “Production Volume” and “Plant Number of Single Truck”, select “Truck Number” and “Driver”, click “Store/Produce” button, the computer will download the data. The main markup content of the downloaded data will appear at the left lower corner. Check the data on the monitor interface and the downloaded data. Now, if the works needing preparation, such as motor startup, have been prepared, you can click “Start Production” button on monitoring interface or “Cycle Start” or “Single Plate Start” on the operation panel to start the production process.

Title bar Menu bar Command bar Edit area Status bar

Picture 7 Main interface of management software

Non-task list pattern

In the edit area of data management interface, click button to Newly Add ist. At the left upper corner of the compiling area, cancel the "√" in the small box before the , not choosing .

Task Mode

Enter the related information directly in the management interface, select batching Task Mode e data entry, click button, download the data.

Store/Produce

After checking that the data is correct, start the production.

4. Motor Startup

Start the motor firstly to prepare for pneumatic pipeline pressure. Press down the start button of the air compressor on the door of the power cabinet to start the air compressor, the indicating lamp will be lighted. After the air compressor starts and reaches to a certain pressure (there is indicating lamp at the lower right corner of the monitoring interface), start the mixing motor. After the mixing motor starts, start the inclined belt conveyor. The motor of flat belt conveyor will start automatically after the startup of inclined belt conveyor. After the mixing motor and belt conveyor start, the corresponding cartoon in the monitoring interfaced will start to conduct indication.

3.2.2 Automatic Operation

Observe the pressure of pneumatic pipeline after the task successfully downloading, and then start the production if the pressure meets the requirement. Click "Start Production" button in the monitoring menu of the upper computer, or press down the "Auto" button on the console firstly, and then press down the "Start Cycle" or "Start Single Plate" button, the cycle

indicating lamp will be lighted, the system begins to operate automatically. In the operation process, the monitoring menu will dynamically display the operating status, mixing time, plant number in the truck and so on.

During the automatic operating process, the user can suspend batching, suspend feeding, prohibit discharging material, deduct scale and reset according to the actual needs, and intervene the production process, and can also modify the operating parameters.

"Suspend batching" —— refers to suspend the next batching process, the batching being processed is going to be finished.

"Suspend feeding" —— refers to suspend the next feeding process, the feeding being processed is going to be finished.

"Prohibit discharging" —— refers to prohibit the mixer discharging, the discharging being processed is going to be finished.

"Deduct scale" —— refers to that when the material weight exceeds the target weight, the user can operate this function, that is, leave the excessive material in the weighing hopper, when conducting weighting for the second time, the weighing value is recorded from the left weight. Click "Deduct scale", a dialogue window pops up, enter the deducted value and affirm. Explanation: this function is not suitable for the cumulative scale.

"Reset" —— refers to set the value of weighing terminal indicating instrument to be zero.

During the automatic process, the program circularly implements the actions of batching, feeding, charging, mixing and discharging, the operator should carefully observe and timely process the exceptional situation. When the automatic operation completes, the cycle indicating lamp will extinguish.

When the user wants to terminate the automatic operation, press down the "Cancel Production" button in the monitoring menu of upper computer or press down the "Manual" button on the operation panel until the cycle indicating lamp extinguishes, the automatic production process is terminated. If the user wants to terminate the automatic operation during the production process (cycle indicating lamp extinguishes), only the user handle with the uncompleted process manually can the next automatic cycle be started.

If abnormal situations occurring during the production process, the user can switch automatic operation to manual operation, now, the production process will be suspended, the cycle indicating lamp extinguishes. After handing with the failures manually, switch to automatic operation again, this cycle will be finished automatically.

3.2.3 Manual Operation

Manual operation can be divided into manual operation of upper computer and manual operation of console.

1. Manual operation of upper computer

There are operation buttons set for each controlled objectives in the monitoring menu, no matter under the manual operation situation and the automatic operation situation, the user can click these buttons by the mouse to control the hopper door, vibrate some motor and intervene and control the production process.

2. Manual operation of console

To conduct the manual operation on the console, only the user press down or click "Manual" button to switch the operating pattern to manual can control the button on the operation control panel. Switch to automatic status when the cycle indicating lamp does not extinguish, then the production will be processed automatically.

If the upper computer can't run because of some failure, the key switch should be turned to the corresponding position

when preparing the powder lot and additive manually.

3.2.4 Entry and Function Introduction of Data Management System

Picture 8

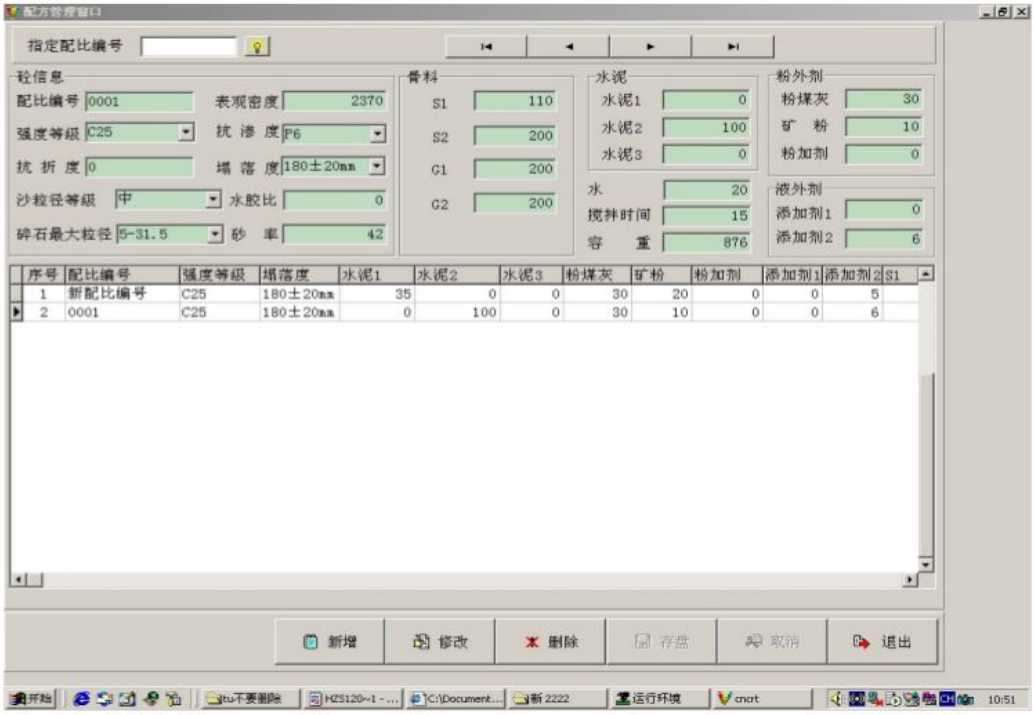

Picture 9

The main interface of data management system include: title bar, menu bar, command bar, edit area and status bar. The data management system is mainly for customer data management, ingredient management, data statistics and print of delivery list and other statements.

1. Ingredient management

Click “Ingredient Management” button in command bar or select “Ingredient Management” in the drop-down list below menu bar “Ingredient”, open the ingredient management window (as shown in Picture 9).

Click the corresponding buttons in this window to add, modify or delete ingredient data. In addition, enter proportioning number in the textbox on the right of “Specified Proportioning Number”, click the “Bulb” shape button on the right of the textbox to make the corresponding ingredient data display in the page quickly.

When adding and editing the ingredient, the user can only choose one of the three kinds of cement. Under the situation

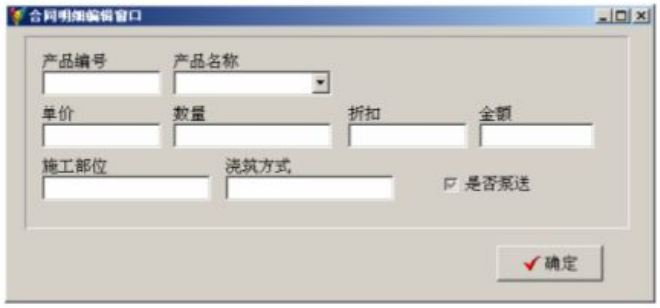

that there is only one additive scale, the user can only choose one kind. The ballast can be selected and matched based on the requirements. In addition, the characteristic data about some concrete related to the ingredient is added in the ingredient, which needs relevant editing.

Note: ingredient refers to the weight proportion of various materials contained in one cubic meter of concrete after mixed and compacted (the unit of above-mentioned weight is Kg).

2. Contract management

Click the “Contract Management” button in command bar or click “Contract Management” button in menu bar to open the contract management window (as shown in Picture 10).

Picture 10

In contract management window, the user can add, modify and delete the contract and contract details. The type-in specific contents of contract include order number, address, contact person, telephone, fax, project name, construction unit name, construction part, remarks and so on.

Contract details (as shown in Picture 11) mainly record the demands of ordering units for different levels of concrete strength, including: ordering amount, concrete strength level, proportioning labeling, pumping or non-pumping (double selection available), unit price of concrete and other specific information. The persons with permission can modify and delete the contract information or add new contract, the managers can easily query the detailed information of the contract.

Picture 11

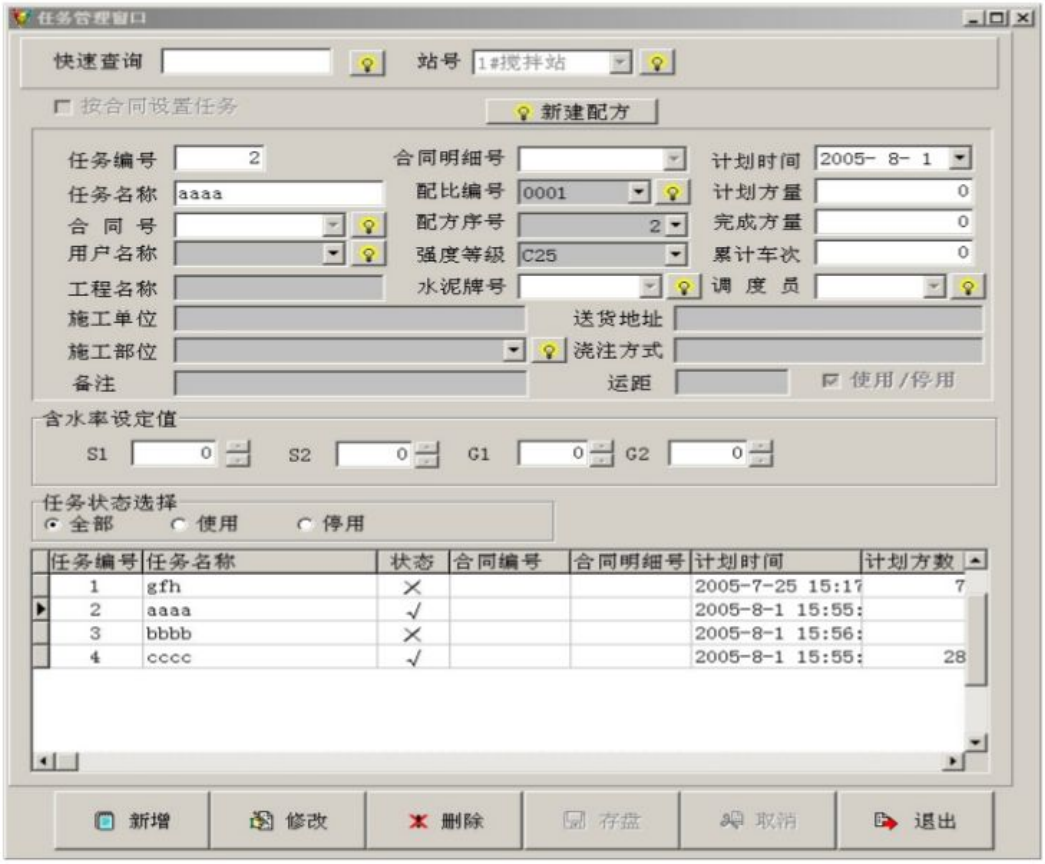

Picture 12

3. Task list management

Click "Task Management" button in the command bar or select "Task Management" in the drop-down list under the menu bar "Control" to open the task management window (as shown in Picture 12).

In the task management window, we will establish the contract production quantity on behalf of a batch as a task, so that during the production, for the different contracts, we only need to select and change the name of different tasks (Task name is the index for a task list).

In this window, the user can add, modify and delete the task data. When a new task list is built, some data can be entered directly, for example: planned quantity; some can be selected through opening the drop-down list, for example: proportion number; if there isn't required data in the drop-down list, you can click the "Yellow Bulb" button on the right side of list box to open the related window for data maintenance, such as: user name.

Task status use instruction: in the status bar of the task list at the lower part of task management window, there are marks of cross (×) and tick (√), you can change the mark between cross and tick by double-clicking them with the mouse. The task

order with the tick mark will be shown in the task name list of the main management interface window, so that only the task order used currently can be displayed when there are many tasks.

4. Delivery order setting

Click "Delivery Order Setting" in the command bar to open the delivery order setting window (the current production setting window) (as shown in Picture 13).

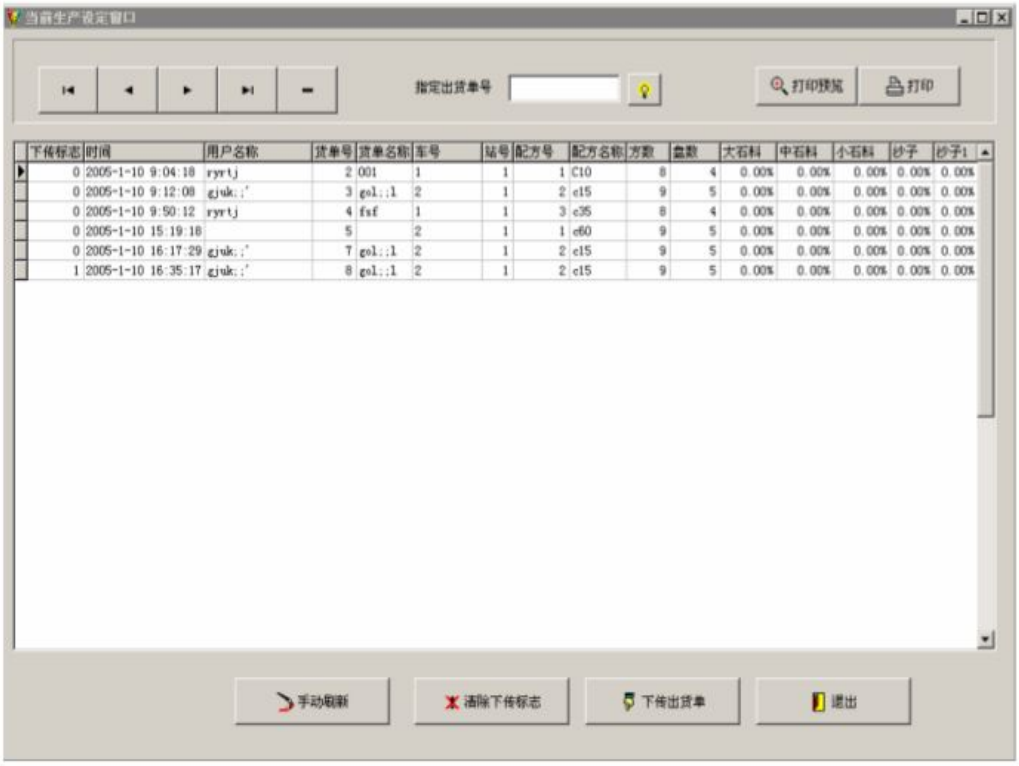

Picture 13

If you add a new delivery order but do not conduct production or do not complete the production for some reasons, then this delivery order will be remained in the table in the window. If the delivery order which did not be produced still has to produce later on, the production task can be conducted again. For the delivery order whose automatic production is interrupted and be made up by manual production, you can click the "—" command icon to delete it.

3.2.5 Basic data maintenance

Data maintenance refers to enter the necessary and frequently-used data and information in the database to meet the calling requirements of the software.

Select "Data Maintenance" in the menu bar, the drop-down menu appears (as shown in Picture 14).

Data maintenance includes: customer data maintenance, supplier data maintenance, employee data maintenance, product data maintenance, material category data maintenance, storage bin type data maintenance, batching plant data maintenance, construction site data maintenance and cement data maintenance.

1. Customer data maintenance

Open the customer data maintenance window (as shown in Picture 16), click "Add" button, the customer edit window pops up (as shown in Picture 15), enter the related information in the blank textbox, press "OK" button after completion of entry to save the data into the database.

If there is some information needing to change, click "Modify" button (Note: customer number must be a number);

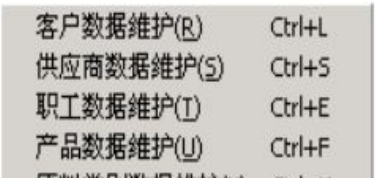

Picture 14 Picture 15

2. Other data maintenance

The operation specification of other data maintenance is the same as “customer data maintenance”.

3.2.6 Use of other parts of management system

1. System management

Click “System Management” in the menu bar to open the drop-down list (as shown in Picture 17):

Picture 16 Picture 17

Data import / export: the standard Microsoft SQL Server data import and export;

Database grooming: Database maintenance (as shown in Picture 18), you can delete the data about unwanted time period according to the company needs (Note: the deleted data can not be restored);

Picture 18 Picture 19

Batching plant information: the basic information of batching plant (as shown in Picture 19), the user can directly enter or modify the information including plant number, plant name, model, productivity of each mixer, establishment time of the plant and affiliated unit; (Hint: If the information is empty or incorrect, please refer to the batching plant number in the “Batching Plant Data Maintenance” in the menu item "Data Maintenance" or in the system setting in "System Management ").

System setting: the system setting window is shown in Picture 20, the user can set background screen, login screen and batching plant number;

In print setting, click "Delivery Order Setting" button to open the delivery order setting window, as shown in Picture 21. In this window, you can set the items of the delivery order to be printed and the location of the items on the delivery order. The scale unit is centimeter, the default setting is a standard delivery order of Zhengzhou Haomei. If you use your own customized delivery order, for the items listed in the picture, you can tick in the choice box of the items to determine the item; for the print location of the item, you can use the mouse to drag the item with reference to the grid coordinates to the position similar to the delivery order, and adjust the position precisely after test print, when using the mouse to drag the item, you can use the cursor to finely adjust the item. After adjusting in place, click "Save" button to save the customized delivery order.

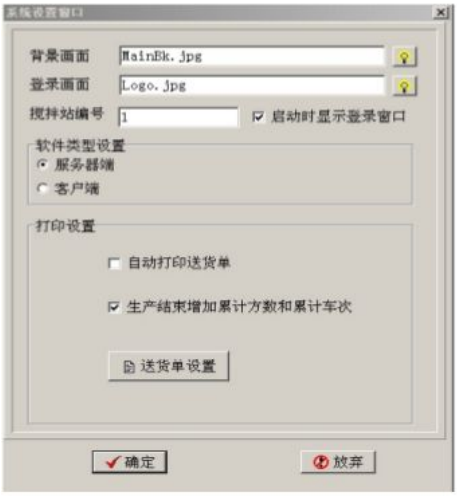

Picture 20

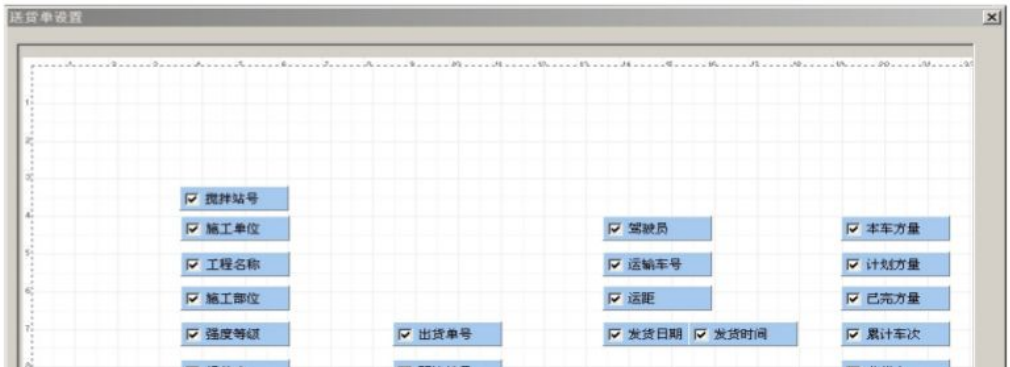

Picture 21

User management: the user logining with administrative account can manage the users of the system and set the authority.

User login: manage the user login of the system.

User log-off: log off the logged in user.

Exit: exit the management system.

2. Production

Click “Production” in menu bar to open the drop-down list “Log Query” (as shown in Picture 22):

This window records the timetable of the user entering the system and exiting from the system.

3. Delivery management: can query the delivery order.

4. Vehicle management:

Vehicle information entry: you can maintain the data of transport vehicles in this window, if you select the vehicle number, the corresponding driver will appear in the listbox of drivers.

Vehicle information query: you can query the vehicle dispatching times, time, total transport quantity, transport distance, total transport distance and other information as per the vehicle number or the driver.

5. Statement management

The drop-down list of “Statement Management” (as shown in Picture 23).

Production Detail Statement: production statement print preview is divided into five types: production list, statistics according to concrete type, statistics according to project name, statistics according to delivery order ID and statistics according to delivery order name (as shown in Picture 24).

Production List: click "Preview" after selecting the plant number, date and "Production List" type, the production list pops up, including date, time, order number, proportion number, quantity of single truck and actual feeding quantity of each material;

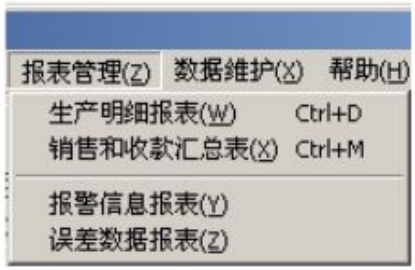

Picture 23

Statistics according to concrete type: statistics of consumption figures of various materials according to the concrete type;

Statistics according to project name: statistics of consumption figures of various materials according to the project (contract);

Delivery order ID: statistics of consumption figures of various materials according to the delivery order number;

Delivery order name: statistics of consumption figures of various materials according to the delivery order name;

Summary sheet of sales and collection: as shown in Picture 25, the user can preview the statement according to batching number selection, date selection and statement type selection, the statement type is divided into “Summary in accordance with project”, “Summary in accordance with product type” and “ Summary in accordance with customer”.

=

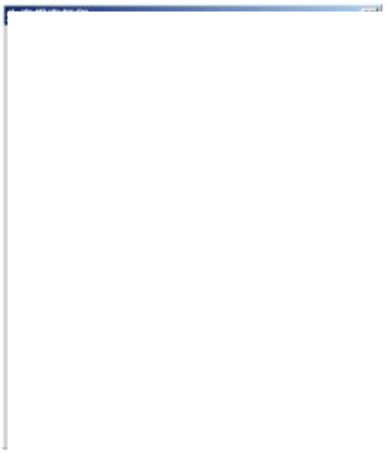

Picture 24 Picture25

3.2.7 Introduction of Computer Supervisory Control System

The supervisory control interface is developed by configuration software, collects and simulates the onsite data and controls the process through communicating with PLC and weighing instrument. The supervisory control software and data

management software are mutually independent, they contact and communicate with each other through independent database.

There is a row of text button on the top of the monitoring interface, click these buttons to open the corresponding interfaces or conduct the corresponding operations. A brief introduce of some buttons and other functions of monitoring software is made as follows.

（I）Operator management: the equipment manager uses the identity of system administrator to login and set the operator management function. The manager can add or reduce the number of operator and set different authorities for every operator, the setting range is 0-999.

(II) Operator login: only after the operator logins with his own user name and password can he effectively operate and control the various functions of the interface.

(III) Operator exit: after conducting “Operator Exit”, the authority of operator is canceled, only reentering the account and password can the operator enter the system for operation again, which can prevent the person without authority operating.

(IV) Debugging: this interface can directly display and modify the proportion value, fine set quantification, head drop value of the instrument and display the dynamic value and record value of material weighing.

(V) Explanation of some instructions on the monitoring interface: when starting using some material in the formula, the sign character on the corresponding material storage bin presents green, the corresponding powder lot and additive storage bins are marked with “√”; the color of bar at the bottom of powder lot bin is green, indicating that the powder lot reaches to the material level, if the color is red, it indicates that the material is lower than the lower limit, the corresponding material will not be mixed at the moment.

3.3 Precautions for Operation

1. In order to operate and use this system better, please carefully read and understand the contents of this manual before using the system, which will help you understand the structure and function of the system, be familiar with the operation and maintenance procedures, and increase reliability of the equipment and reduce the repair cost and downtime.
2. If you have some questions, please consult the relevant technical departments of Zhengzhou Haomei to ensure the operation in accordance with correct procedures.
3. Please do not produce under the lightening weather, shut down the system and switch off the main power.
4. The network interface of industrial personal computer has been closed when leaving the factory, if the user needs to use the network interface, please communicate with the technical department of our company, the interface can be used only after the user has done lightening protection measures.
5. The lightning stroke is natural calamity, the damage on the batching plant caused by lightning stroke is not included in the free maintenance.
6. Pay attention to the indicating lamp on the control panel and each work flow, dealing with in time if finding problems.
7. Press down the emergency stop button if the equipment needs emergency stop caused by failure occurring.
8. For the operation transferred into manual pattern, when automatically weighing the next plate, if you can’t affirm whether there is material in the storage hopper, please take a look at the storage hopper to affirm there is not aggregate, the re-weighing can be conducted.
9. If there is problems in automatic operation, firstly take a look at the plate number recorded in the computer, set the residual plate number, and then press down the cycle start button; or manually mix the residual plate number, and check where the problem is at the same time (recommend manual operation).
10. During the working process of batching plant, contact with the rotating parts is strictly prohibited, especially the belt conveyor; if the repair is necessary, the truck must be stopped and the power must be switched off.

3.4 Production Operation When Upper Computer Failure Occurring

When the upper computer does not start, you can use PLC and the buttons on the panel to control the production, but the

production data and delivery order should be recorded and filled manually.

At this time, two automatic production methods of continuous automatic production and single-plate continuous automatic production can be adopted. If the PLC is re-powered, the plate number of continuous production is four. If the PLC is not re-powered, the plate number of continuous production is the number before the upper computer failure occurring.

The ingredients data should be set in the instrument by manual work, the target amount of material in the instrument is the amount of needs of one plate, but not the amount of needs of one cubic meter of material.

About the functions of forbiddance and forbiddance lifting.

When some material in the formula is set to zero in the upper computer, the program will automatically set such material as forbidden, and pass to the PLC, PLC will skip this material in the production process and continue to execute the following program.

When the upper computer failure occurring, if some material is not used, its target amount should be set to zero in the instrument firstly, and then it should be set as forbidden. The setting method is as follows: firstly, press down "Emergency Stop" button; secondly, set forbiddance and forbiddance lifting. When some material is forbidden, press down the stop button of transmission band and the ingredient button of this material at the same time for more than 1 second. When the forbiddance is lifted, press down the start button of transmission band and the ingredient button of this material at the same time for more than 1 second

3.5 Cleaning of Equipment

After the production completing, the main mixer should be cleaned.

The precondition of washing machine is that the console is powered on, the air compressor and host machine are started, and the system working mode is manual. Press down the washing machine button on the console, the washing machine button locks itself, at the moment, the system automatically stops conveying the belt, open the water inflow magnetic valve and discharge magnetic valve of water weighing hopper, start the drainage motor, the water begins to flow into the mixer, after a period of time, the discharge door of the mixer will open automatically to drain. When washing machine completing, release the washing machine button, now the water inflow valve of water weighing hopper closes automatically, after a few seconds, the discharge door and drainage motor of water weighing hopper close automatically. The discharge door of the mixer will be in open state all the time after it is opened, this moment, you can manually open and close the discharge door according to the needs, in order to fully clean the door.

3.6 Equipment Maintenance

3.6.1Routine inspection

I. Check the working conditions of lubricating points of each rotating part every day, and timely supply lubricating oil.

II. Check the lubricating oil volume in the lubricating oil cup of the mixer every day, and timely supply lubricating oil.

III. Check the oil level of oil sprayer of the gas circuit system once a week, and use the lubricating oil with the viscosity of 2.5～7^0E.

IV. Respectively open the drain valve before the machine starting and after the machine shutting down once every day to drain the water condensed in the air compressor and air storage tank.

V. Check whether the fastening pieces (such as bolts and nuts) are loose every week, if there is loose piece, you must tighten up it in time, especially some parts bearing variable amplitude loading.

VI. Frequently check whether the equipments of water supply, air supply and additive systems are normal every day.

VII. Check whether the electrical control system and the instruments are normal every day.

VIII. Check whether the mixer shaft and the cylinder are clean every day, and if there is too much concrete agglomerated on the mixer shaft, it must be cleaned manually.

IX. Clean or replace the filter screen of the powder lot tank deduster every six months

X. If the downtime is more than one week, the materials (such as cement, water, additive and various aggregate) in each weighing hopper must be emptied, and the main mixer, discharge hopper and other places must be cleaned, so as to avoid the materials hardened.

Note: the filter screen of the powder lot tank deduster must be cleaned by air-blowing or banister brush, but not by water.

3.6.2 Replacement of quick-wear part

I. Mixing blade and lining plate

The material of mixing blade and lining plate is wear resistant cast iron, the general service life is 50,000～60,000 tanks. Please follow the requirements in service manual to replace the accessories.

II. Conveyor belt

The conveyor belt is easy to be aged or damaged because of the load and severe service condition and should be replaced if it influences the production.

III. Sealing strip of main machine discharge door

If the sealing strip of main machine discharge door is worn down, the discharge door can be moved up to compensate. If the sealing strip can not be compressed tightly and the leakage problems can not be solved through adjusting discharge door, it shows that the sealing strip is badly worn and must be replaced.

IV. Filter element of powder lot tank deduster

If the dust removal effect is still not good after cleaning the filter element, the filter element must be replaced.

3.6.3 Inspection and maintenance period

Table 3-6-3 shows the items in need of inspection and their periods.

Table 3-6-3 Inspection items and periods table

Period / Item	Every day	Once every 2,000 tanks	Once every 10,000 tanks	Once every 30,000 tanks	Once every 50,000 tanks
Lubricating oil volume in lubricating oil cup	√				
Each lubricating point		√			
Cleaning of mixer shaft	√				
Mixing blade and lining plate					√
Filter element of powder lot tank deduster				√	
Conveyor belt	√				
Looseness of bolts and nuts	√				
Drainage of air storage tank of air compressor	√				
Oil level of oil sprayer		√			
Pneumatic butterfly valve				√	
Pneumatic magnetic valve		√			
Dust collector system	Once every week				

3.6.4 Use and maintenance of air compressor

1. Instruction

The air compression of air compressor is realized through the upward and downward move of the piston in the cylinder. During the fall stroke of the piston, the air is sucked through the intake valve and the exhaust valve remains closed. During the rising stroke of the piston, the air is compressed, the intake valve is closed, the compressed air opens the exhaust valve and enters into air storage tank through the one-way valve. Now, the compressed air can not be used yet, unless the air compressor makes the pressure in the air storage tank rise to higher than the demanded pressure. The inlet of air inflow filter must be kept clean to avoid the decrease of air supply caused by blockage.

2. Maintenance

(I) Cleaning of air inflow filter

To clean the air inflow filter, disassemble the air inflow filter assembly fixed by bolts and take the filter element from the filter shell. Open the front cover of filter, and then blow off the dust by the deduster. If the element is too dirty to clean, it should be replaced. Follow the procedures on the contrary to the above procedures for installation.

(II) Cleaning of valve plate

The air valve components can be disassembled only after removing the cylinder cover. Before disassembling every connecting pipes or loosening the cylinder cover bolt, please affirm that all the air pressure is vented from the air compressor. The disassembling sequence is as follows:

1. Loosen the nut of exhaust pipe and disassemble the exhaust pipe;
2. Disassemble the eight cylinder bolts, lift the cylinder cover and air valve components;
3. Loosen and disassemble the bolts and nuts of the air valve components;
4. Disassemble the valve plate localizer, air intake valve sheet and air release valve sheet, and clean the locating sheet, valve sheet and valve plate; follow the reversed order to add new gasket.

3. Table for routine maintenance items

Table 1-2 Table for routine maintenance items

Item	Operation cycle				
	Operation time: hour/month (Meaning: operating for how many hours or how many months)				
	500/3	1000/6	1500/9	2000/12	2500/15
	Compressor				
Inspection of oil level in crankcase	Every day				
Inspection and cleaning of air inflow filter	Every week				
Inspection and cleaning of lubricating oil	Every month				
Petroleum lubricating oil	×	×	×	×	×
Replacement of lubricating oil in crankcase				×	
Labyrinth piston O-shape ring				×	
Inspection, cleaning or replacement of air valve of compressor				×	
Appearance cleaning of intercooler	Every month				
Inspection of low oil level switch (If available)	×	×	×	×	×
Manual safety valve	Every month				
Cleaning of cylinder blade	Every month				

	V-shape belt				
Inspection of tightness of belt bearing	Every month				
	Motor				
Inspection and lubrication of motor				×	
Cleaning of motor	Every month (Every week under very bad environmental condition)				
	After cooler				
External cleaning of after cooler	Every month (Every week under very bad environmental condition)				
Internal cleaning of after cooler				×	
	Air storage tank				
Manual drain valve	Manually drain once every 8 hours				
Safety valve	Every month				
	Others				
Inspect and screw up all the bolts	Every month				
Inspection of abnormal noise and vibration	Every month				
Inspection of leakage	Every month				

3.6.5 Maintenance of double-horizontal shafts mixer

1. Material requirement

This mixer is suitable for the inert powdery and granular material with the granularity of no larger than 150mm, of which, the media of 120 ~ 150mm does not exceed 12% of the total capacity (the proportion is shown in Table 1-3)

Table 1-3 Mixer characteristics table

Model	2250/1500	3000/2000	4500/3000	Remarks
Aggregate size (mm)	0～120	0～150	0～150	
Volume percent	0～32≅ 50% 32～63≅ 20% 63～80≅ 10% 80～100≅ 10% 100～125≅ 10%	0～32≅ 40% 32～100≅ 35% 100～120≅ 13% 120～150≅ 12% 150～180≅ 6%*	0～32≅ 40% 32～100≅ 35% 100～120≅ 13% 120～150≅ 12% 150～180≅ 6%*	Need tailor-made mixing knife
Remarks：				

Service restriction: this mixer is not suitable for the inert matters with the volume of larger than 150mm and such adhesive media as clay with the quantity of more than 12% and the humidity near to 15%. Semi-dry concrete mixture sticking to the mixer shaft will make the diameter of mixer shaft increase, which will ultimately reduce the efficiency of stirring arm. Therefore, we must maintain the shaft clean.

2. Cleaning of mixer

The mixer should be cleaned once at least in a working period (concrete hardening time, generally within 2 hours). The

material deposit in the mixer should be cleaned up comprehensively after the materials are smashed every day. In the process of cleaning by water, the user can prepare crushed stones of about 500Kg to mix in order to wash cleaner.

3. Lubrication of mixer

Picture 2-1 Outside view of lubricating oil pump

(I) The recommended lubricating oil for mixer reduction box: MOBIL GEAR 629 (Mobil) or OMALA OIL 150 (Shell), the oil consumption is 16 liters.

(II) Lubricating oil replacement period of mixer reduction box

The lubricating oil should be replaced after it is put into use for the first time for 50 hours. Later on, it should be replaced every 1,000 hours or at least every six months. Pay attention to that, for the first time of oil replacement, after the oil is released, 2 liters of lubricating oil should be added to clean the reduction box. In the subsequent oil change process, if the brand is changed, the reduction box should be cleaned by lubricating oil.

(III) The recommended lubricating oil for hydraulic system: DAT25 (Mobil) or TELLUS S46 (Shell), the oil consumption is 10 liters, the oil should be replaced once every 2,000 hours or at least one year.

(IV) Lubricating oil pump (lubricating oil pump mainly supplies oil to shaft head sealing): use NLGI0# lubricating grease in winter, use NLGI1# lubricating grease in summer, the oil must be filled through oil inlet filter and is forbidden filling through opening the upper cover of oil pump.

(V) Lubricating parts: main shaft bearing, discharge door bearing, motor baseplate rotation axis, motor baseplate jackstay rotation axis and hydraulic oil cylinder rotation axis.

4. Sealing of main mixer

(I) Shaft end sealing: the shaft end sealing directly determines the service efficiency and life of mixer. Full-automatic shaft end sealing lubricating system can improve the sealing effect and life. Barometric shaft end protection device makes sure that the operating of mixer is more stable and reliable.

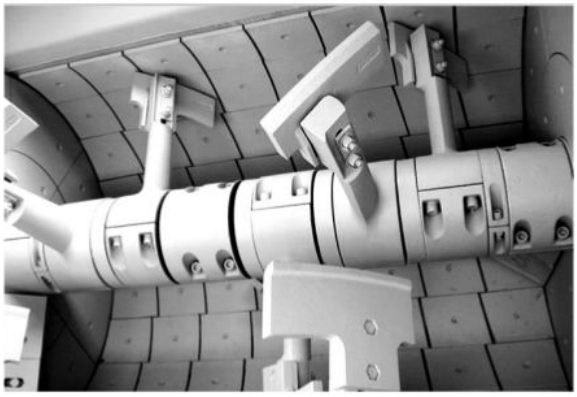

Picture 2-2 Structural drawing of mixing chamber

(II) For full-automatic shaft end sealing lubricating system, the method for checking whether the lubricating grease really reaches to the shaft end of the main machine is as follows:

1. Check the indication of oil pressure gauge (10 ~ 60bar): if the indication of oil pressure gauge is lower than 10bar, the valve core is blocked; if the indication of oil pressure gauge is higher than 60bar, the diverter valve core is blocked.
2. Check the lubricating grease consumption (≥ 42ml / h), that is, the daily consumption is 1 / 4 of the whole tank capacity. If consumption is lower than this amount, you must check whether the lubricating oil reaches to the four shaft heads, the method is as follows: there is a spare grease fitting equipped respectively at the four shaft ends, you can press the core of the grease fitting by your nail, if there is grease exuding from the core, it shows that the lubricating oil pump is normal.
3. If you find that the shaft head is short of oil, you should firstly check whether the oil pipe of shaft head is unblocked, and then check whether the diverter valve is unblocked, finally check whether the pump core is in regular supply. If you can't stop the machine for processing the failure, you should fill grease by grease gun through the grease fitting for at least 2 times every day.

(III) Barometric shaft end protection device: adjust the pressure of reducing valve to 1～1.5bar. Check the pressure after the wind pressure magnetic valve is powered on (0.2～0.5bar). The wind pressure magnetic valve is powered on when feeding and is powered off when discharge.

Gap adjustment between lining plate and blade: measure the gap between the blade and the top of the cylinder body, the normal working gap is 3～8mm. The adjustment moment of blade bolt is 200Nm. After adjusting the gap and working for several periods, the tightness of bolts should be checked again.

5. Other routine inspection items

(I) Tightness of bolts

After working for a week, the tightness of blade, mixing arm and lining plate bolt should be checked. After working for 2,000 hours, the tightness of coupling bolt between the pulley and the coupler must be checked.

(II) Tightening torque of bolts

Mixing arm: 420Nm; blade: 200Nm; lining plate: 100Nm; pulley: 130Nm; coupler: 100Nm; shaft head: 450Nm.

(III) The mixing arm whose wear degree reaches to 50% should be replaced; the lining plate should be replaced when its thickness is smaller than 3mm; the blade should be replaced when the blade gap can't be adjusted any more.

(IV) Check and adjust the tensioning degree of transmission belt

1. Check the belt tension

（1）Remove the flywheel guard;

（2）Carefully check whether all the belts are in good condition and whether there is derail and aging;

Important

Notice: if there is one or several belt aged, the whole set of belt should be replaced at once.

（3）When bringing pressure of 100N (10kg) to the belt, the pressure points is between the two pulleys, bring pressure to the middle part, the deformation of belt along this direction is not more than 20mm.

3.6.6 Care and maintenance of belt conveyor

1. Care and maintenance of gearing (electric roller or reducer)

Add lubricating oil to the gearing before using it, the trade mark of lubricating oil is L-KC100, 150# medium load extreme pressure industrial gear oil. The method for controlling the oil charge: charge the lubricating oil to the height required in the instruction manual.

2. Lubrication of roller bearing

The roller bearing is UCP series (the frequently-used bearing is UCP214) and is lubricated by lubricating grease with the oil charge frequency of one time every day.

3. Cleaning of roller and carrier roller

The material deposit on the rotary drum and carrier roller should be cleaned up frequently, because too much material deposit will affect the operation of the belt (deviation).

4. Maintenance of sand-scraping device

Regularly check the abrasion degree of sand-scraping device, the sand-scraping device should be replaced in time when it is worn to a certain extent.

5. Replacement of rubber flange

The rubber flange should be replaced when it is worn seriously and there is material spilling.

6. Method for adjusting the belt conveyor deviation

Method 1: adjust the roller (turnabout roller and tension roller）

Roller adjustment method:

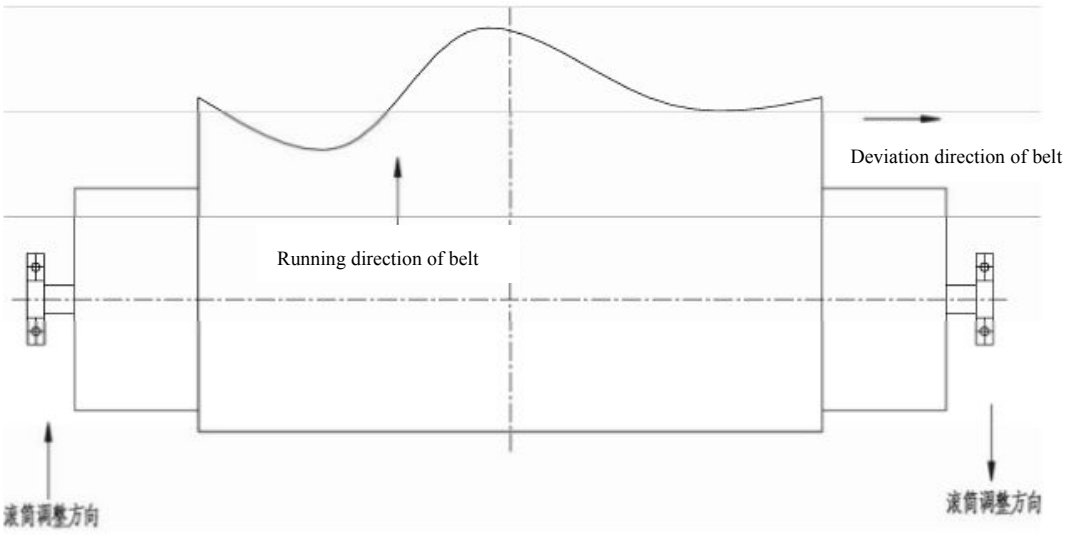

Roller adjustment direction Roller adjustment direction

Diagram 2-3 Roller adjustment diagram

Method 2: adjust the carrier roller (grooved upper carrier roller and parallel lower carrier roller)

Carrier roller adjustment method:

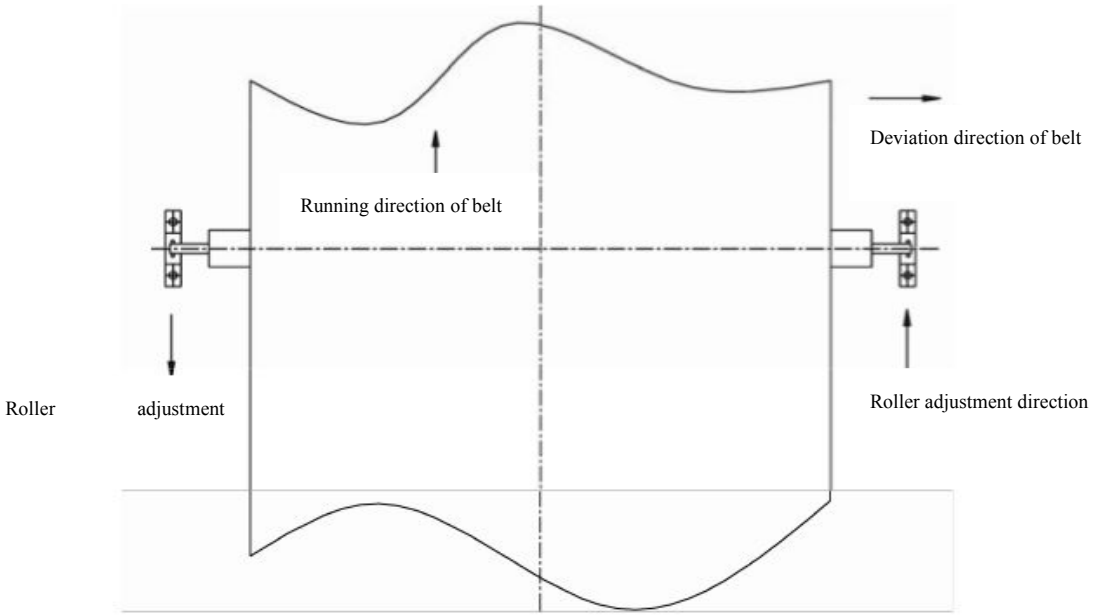

Diagram 2-4 Roller adjustment diagram

7. Prevention and treatment of interface fracture and transversal tearing

Reason: the sulfidizing of the joint is disqualified; (instantaneous) impact load is too large, the frail part fractures by the influence of alternating stress; the interface direction is inconsistent with the movement direction of the belt; fatigue damage caused by long-term use.

Hazard: badly damage the belt.

Prevention and solution: reduce the load as much as possible, especially the belt with counterweight tensioning device, control the counter weight within 200kg～300kg, not slipping in rainy season is appropriate; strengthen the inspection so as to avoid the belt being blocked and scratched by foreign matters; strength the training to belt assembly workers to avoid the belt interface direction is installed inversely.

8. Prevention and treatment of surface degumming

Reason: wear caused by relative movement between the belt and carrier roller; wear caused by relative movement between the sweeper and belt; glue line sulfidizing is disqualified; wear caused by impact of materials (especially the material of large size) on the belt.

Hazard: the belt will be thinner and the strength will be lower.

Prevention and solution: strength the inspection, find out and deal with in time.

9. Prevention and treatment of transversal tearing

Reason: the foreign matters such as round steel and angle steel mixed in the material often have sharp edges, which are very easy to puncture the belt, if they are blocked at some places, it will cause pressure and continuous scratch on the belt

surface, the tighter the blockage is, the higher the pressure is, at last, they will pierce the belt and cause the transversal tearing of belt along the movement direction; the turnup edge and corner of carrier roller caused by the excessive wear and piercing will scratch the belt; the grooved carrier roller consists of three pieces of carrier roller, there is a small gap between the carrier roller. If the carrier roller if blocked, there may be foreign matters with sharp angle such as gravel in the gap. If it isn't cleared away, the belt may be scratched; man-made misoperation, the belt is damaged when the operator cleaning the belt.

Hazard: seriously damage the belt; the materials spill.

Prevention and solution: the user must require the material supplier to strictly control the material size; strengthen the grid sieve maintenance, timely repair the damage; the belt user must require the material supplier to conduct the deironing treatment for the material or the user conduct the treatment himself; inspect frequently, find out and deal with the problems in time, strengthening the maintenance is the key; the repair of rubber conveyor belt can adopt cold adhesion method and should be done by the professional staff.

Warning

Warning: prohibit conducting the works related with cleaning when the belt is running.

3.6.7 Care and maintenance of powder lot tank

1. Safe operation specification of pumping powder lot

The deduster on the tank top should be turned on to dedust for 1～2min respectively when pumping the powder lot and the pumping completing. The filter element of the deduster should be cleaned or replaced in time if it is blocked or damaged. Regularly check whether the safety valve on the tank top is invalid caused by powder lot agglomeration.

2. Prevention and treatment of ash emitting form the powder lot tank top

Reason: the filter element of deduster is blocked, when pumping the material, the pressure in the powder lot tank increases. If the pressure rises to the adjustment pressure of safe pressure valve on the tank top, the safety valve will open, the gas with ash outflows, which brings about ash emitting form the tank top.

Prevention and solution: before pumping the powder lot, start the vibrator of the deduster on the top of the tank for 1～2min to shake the dust stratification on the filter element of the deduster off. After the pumping, start the deduster on the tank top again for 1～2min to shake the dust stratification off. In addition, the filter element of deduster and safety valve should be cleaned regularly.

3. Prevention and treatment of ash returning problem of delivery pipe

Phenomenon: after the bulk handling truck feeds material into the powder lot tank and the delivery connector is taken down, there is powder returning from the powder lot tank, which causes the environment pollution and waste.

Reason: the filter element of dust collector on silo top is blocked, at the material mixing stage, there is certain positive pressure formed in powder lot tank, after removing the ash transport pipe, some powder lot afloat is formed and returned along the delivery pipe; the feeding level indicator is damaged, which cause the feeding amount goes beyond the outlet of delivery pipe, after removing the ash transport pipe, the redundant powder lot returns along the delivery pipe.

Prevention and solution: clean the filter element of dust collector on the silo top; check and repair the feeding level indicator.

4. Prevention and treatment of ash leakage of delivery pipe

Reason: the delivery pipe is worn out caused by the erosion of material, the turning of the pipe is easier to wear out.

Prevention and solution: frequently check the quick-wear parts such as the bend, if finding excessive wear, the parts should be replaced or the worn parts should be welded up.

5. Prevention of paint peeling

Failure phenomenon: bubble/peeling/ rusting on the surface of the powder lot silo.

Reason: the paint quality is poor; surface treatment is not complete; the wait-for- processing surface temperature is not in accordance with national standards (3°C higher than the ambient dew-point temperature), resulting in the appearance of the paint coating rough (form orange peel / nonuniform light color / painted face, etc.); poor mechanical strength (impact / elasticity /hardness / adhesion, which do not meet the standard), poor weather resistance (sun / rain, etc.); poor acid resistance and alkali resistance; there is acid-base erosion in the service environment.

Prevention and solution: strictly follow the national standard《GB/T 18839.1-2002 Steel Surface Treatment before Coating the Paint Surface Treatment Method General Principle》to conduct surface painting, and strictly follow the national standard《JB/T 7501-1994 Organic Coating of Typical Mechanical Products under Damp and Hot Environment Technical Conditions》to inspect.

6. Prevention and treatment of powder silo roof falling

Failure phenomenon: result in tearing of the joint between the dust collector and powder silo to make the dust collector fall from the powder silo.

Failure reason: the filter element of dust collector is blocked when feeding the material, resulting in the pressure safety valve failing to work. The pressure in the silo rises, the thin part of the silo top will deform caused by high pressure.

Prevention and solution: frequently maintain and care the dust collector, pressure safety valve and other parts.

7. Prevention and treatment of failure of level indicator in the powder silo

Reason: the level indicator itself will not fail to work generally, the main reason of failure is that there is cement agglomeration on the rotary blade of level indicator.

Reason for agglomeration: water leakage of silo top or silo wall causes cement agglomeration on the blade to block the rotary blade of level indicator.

Prevention and solution: frequently check the sealing condition of the silo. If finding failure, you can take the erection bolt of level indicator apart to clean the agglomeration and remove the level indicator to check whether the operation of level indicator is normal. When inspecting level indicator, please pay attention to the operation safety. After the operation is normal, install the level indicator. When installing the level indicator, sealing tape must be used at the bolt parts.

3.6.8 Care and maintenance of spiral conveyor

The spiral feeding machine should be emptied after the completion of operation every day. The running, sealing and lubricating conditions of the reduction box should be checked once per week to make sure that there isn't abnormal noise and oil leakage. The oil should be replenished if it is insufficient, but not exceeding the oil level. Check whether there is sediment at the outlet and hanging bearing once per week, if there is, clean it to avoid causing blocking. Check the tighten status of the machine coupling once per month. Prohibit mixing chunks of hard material and foreign matters into the transported material. After the initial operation of 100h of the reduction box, the user should replace the lubricating oil and replace once per 1,000h later on. The recommended lubricating oil for gear case is Mobil GEAR629# or SHELL 150#.

3.6.9 Weighing system maintenance

1. All the red rubber tube for flexible coupling and corrugated tube in the weighing hopper don't bear tension force in the natural state, otherwise, it will affect the weighing accuracy.
2. After being installed, the sensor only can bear the positive pressure (for cantilever type sensor or load cell) or positive tension (for S-type and pull sensors), can not bear torque.
3. For the same scale, the sensor (3 or 4) must be of the same model and specification. Therefore, be sure to check whether the contents on the nameplates are same when installing the sensors, the appearance of sensors of different specifications may be the same.
4. When conducting electric welding working on the weighing hopper, you must disconnect the control power, and short-circuit the sensor or take the earth wire of electric welder directly on the weighing hopper, in order to avoid excessive current damaging the sensor when welding.
5. After installing the pull sensor (S type), you need to tighten the nut. The suspended screw can not withstand the grooved root of the sensor, that is, there should be a gap of about 10mm left between the suspended screw and the grooved root of the S-type sensors.

3.6.10 Maintenance of magnetic valve

Basic requirement: the lubricating oil should be antirust turbine oil with the viscosity of 2.5～7^{0}E; the lowest operating frequency is once every 30 days; it should not be used under the environment with dust, a large quantity of water-drop, steam, corrosive gas, chemical medicine and solution, and should be used under the filtered, dry, clean and compressed air (the air filter fineness is less than 40μm).

3.7 Inspection of functional oil

Lubricating grease replenishment for each bearing: replenish once per week at least at four places of supporting bearing and 4 places of shaft end sealing (outboard) on the mixer shaft, the oil charge is 4-5 grams once. Please note that the lubrication oil is added at the time of the mixer operating. Add the lubrication grease at least once per month.

The user must replenish lubrication oil once for the bearing of the discharge door every 250 working hours. Replenish lubrication grease once per month at least.

3.8 Functional oil

The following lubricating oil is appointed by our company:

Manufacturer	Trade mark (according to ISO standard E.P level)	
	－10℃/＋30℃ (environmental temperature)	+20℃/+45℃(environmental temperature)
	ISOVG150	ISOVG220
AGIP	BLASIA150	BLASIA220
ARAL	DEGOLBG150	DEGOLBG220
BP	GR XP 150	GR XP 220
CASTROL	ALPHA SP 150	ALPHA SP 220

ELF	REDUCTELF SP 150	REDUCTELF SP 220
ESSO	SPARTAN EP 150	SPARTAN EP 220
FINA	GIRAN 150	GIRAN 220
MOBIL	MOBILGEAR 629	MOBILGEAR 630
SHELL	OMALA EP 150	OMALA EP 220
TOTAL	CARTER EP 150	CARTER EP 220
Great Wall	Industrial gear oil L-CKD150	Industrial gear oil L-CKD220

The appointed lubricating grease for each bearing:

Manufacturer	Trade mark
BP	LTX2-EP
TEXACO	MULTIFAK MP2
AGIP	BLASIA 150
ESSO	BEACON 2
MOBIL	MOBIL PLEX 47
SHELL	SUPER GREASE R2
TOTAL	MULTIFAK MP2
ROL	LITEX EP2

The recommended lubricating oil for hydraulic system: DAT25 (Mobil) or TELLUS S46 (Shell), the oil consumption is 10 liters, the oil should be replaced once every 2,000 hours or at least one year.

Lubricating oil pump (lubricating oil pump mainly supplies oil to shaft head sealing): use NLGI0# lubricating grease in winter, use NLGI1# lubricating grease in summer, the oil must be filled through oil inlet filter and is forbidden filling through opening the upper cover of oil pump.

Lubricating oil in electric roller: the trade mark of oil is medium extreme pressure industrial gear oil or 40# machine oil.

Contact us

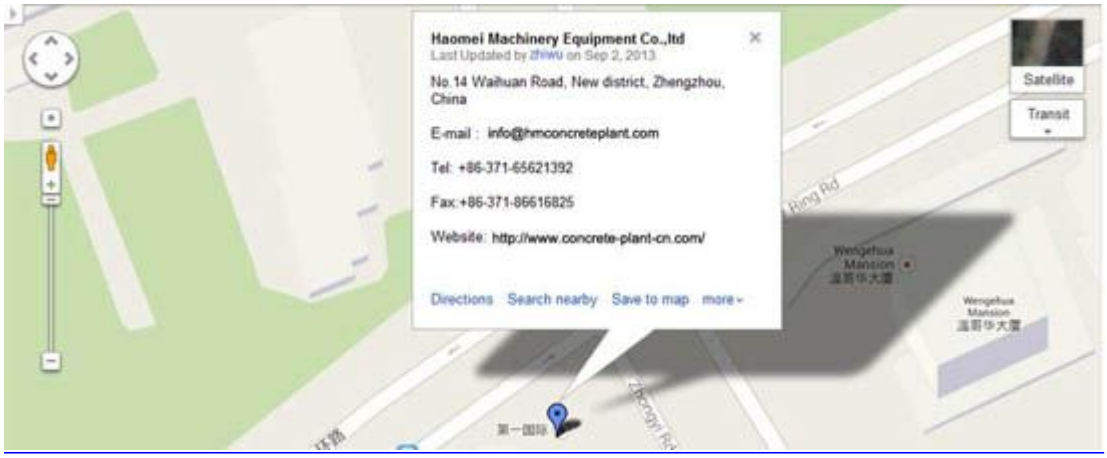

Tel: +86-371-65621392

Fax: +86-371-86616825

E-mail: info@hmconcreteplant.com

Office Add: 1107, First Int., No.14 Waihuan Road, CBD, Zhengzhou, China

Zip code: 450000